Subsection 5.01
Reinforced Concrete Sewer Pipe

I. Scope: This subsection includes the construction of reinforced concrete pipe (RCP) storm sewer lines and culverts as shown on the plans and itemized in the project proposal. The minimum acceptable storm sewer pipe size shall be 18 inch diameter.

Protection of Utilities: The Contractor shall familiarize himself with all utilities locations by consulting with the utility companies, private owners, and by visiting the site. All utility companies should cooperate in locating their properties. The Contractor shall protect utilities and repair all damage he may do at his expense and to the satisfaction of the affected utility company. Where sanitary sewers laterals or services, telephone, traffic or electrical conduits, poles, cables or poles, gas mains or services, water mains, or any other public utilities are encountered, proper protection shall be provided by means of blocks, supports or by some other means acceptable to the affected company or owner so that such property will remain intact and in service. All damage by the Contractor must be repaired in accordance with the affected utility company. Such repair must be done with the least inconvenience to the affected utility company.

II. Materials

A. General: RCP must come from a plant that is on TxDOT's Material Producers List.

B. Pipe: The class and D-load equivalents are shown in Table 1. Arched concrete pipe shall be in accordance with ASTM C506 and the dimensions are shown in Table 2. Horizontal elliptical concrete pipe shall be in accordance with ASTM C507 and the dimensions are shown in Table 3.

Table1
Circular Pipe
ASTM C76 & ASTM C655

Class	D-Load
I	800
II	1,000
III	1,350
IV	2,000
V	3,000

[

Table 2
Arch Pipe

Design Size	Equivalent Diameter (inches)	Rise (inches)	Span (inches)
1	18	13-1/2	22
2	21	15-1/2	26
3	24	18	28-1/2
4	30	22-1/2	36-1/4
5	36	26-5/8	43-3/4
6	42	31-5/16	51-1/8
7	48	36	58-1/2
8	54	40	65
9	60	45	73
10	72	54	88

Table 3
Horizontal Elliptical pipe

Design Size	Equivalent Diameter (inches)	Rise (inches)	Span (inches)
1	18	14	23
2	24	19	30
3	27	22	34
4	30	24	38
5	33	27	42
6	36	29	45
7	39	32	49
8	42	34	53
9	48	38	60
10	54	43	68

C. Marking: Each section of pipe will be marked with following information specified in TxDOT's DMS-7310 "Reinforced Concrete Pipe and Machine-Made Precast Concrete Box Culvert Fabrication and Plant Qualification."

1. Class or D-load of pipe;

2. ASTM designation;

3. Date of manufacture;

4. Pipe size;

5. Name or trademark of fabricator and plant location;

6. Designated fabricator's approval stamp; and

7. Pipe to be used for jacking or boring.

Clearly mark 1 end of each section during the process of manufacture or immediately thereafter for pipe with elliptical reinforcement. Mark the pipe on the inside and outside walls to show the location of the top or bottom of the pipe as it should be installed unless the external shape of the pipe is such that the correct position of the top and bottom is obvious. Mark the pipe section by indenting or painting with waterproof paint.

Pipe will be made available for inspection at the project site before and during installation.

D. Causes for Rejection: Individual section of pipe may be rejected for any of the conditions stated in TxDOT's Annex of DMS-7310 "Reinforced Concrete Pipe and Machine-Made Precast Concrete Box Culvert Fabrication and Plant Qualification."

E. Repairs: Make repairs if necessary as stated in TxDOT's Annex of DMS-7310 "Reinforced Concrete Pipe and Machine-Made Precast Concrete Box Culvert Fabrication and Plant Qualification."

F. Jointing Materials: Use any of the following materials for the making of joints unless otherwise shown on the plans. Furnish a manufacturer's certificate of compliance for all jointing materials except mortar.

1. Mortar: Provide mortar for joints that meets the requirements of Section IV.D, "Jointing."

2. Cold-Applied, Plastic Asphalt Sewer Joint Compound: Provide material that consists of natural or processed asphalt base, suitable volatile solvents, and inert filler. Ensure the consistency is such that the ends of the pipe can be coated with a layer of the compound up to ½ inch thick by means of a trowel. The joint compound must cure to form a firm, stiff plastic condition after application. Material must be of uniform mixture. Stir any small separation found in the container into a uniform mix before using.
Provide a material that meets the requirements of Table 4 when tested in accordance with Tex-526-C.

Table 4
Cold-Applied, Plastic Asphalt Sewer Joint Compound Material Requirements.

Composition	Analysis
Asphalt base, 100%-% volatiles-% ash, % by weight	28-45
Volatiles, 212°F evaporation, 24 hour, % by weight	10-26
Mineral matter, determined as ash, % by weight	30-55
Consistency, cone penetration, 150q, 5 seconds, 77°F	150-275

3. Rubber Gaskets: Provide gaskets that conform to ASTM C1619 Class A or C. Meet the requirements of ASTM C443 for design of the pipe joints and permissible variations in dimensions.

4. Pre-formed Flexible Joint Sealants: Pre-formed flexible joint sealants may be used for sealing joints of tongue and groove concrete pipe. Provide flexible joint sealants that meet the requirements of ASTM C990. Use flexible joint sealants that do not depend on oxidizing, evaporating, or chemical action for its adhesive or cohesive strength. Supply in extruded rope form of suitable cross-section. Provide the size of the pre-formed flexible joint sealant in accordance with the manufacturer's recommendations and large enough to properly seal the joint. Protect flexible joint sealants with a suitable wrapper able to maintain the integrity of the jointing material when the wrapper is removed.

III. Equipment: The Contractor will supply sufficient equipment to excavate, lay, and backfill the pipe in a safe and professional manner.

IV. Construction Methods

A. Excavation: Excavate to the lines and grade shown on the plans. Provide a stable and safe excavation up to 5 feet deep. Excavation protection for excavations deeper than 5 feet are governed by Subsection 5.08, "Trench Protection." Keep topsoil that been removed separate, and replace it, as nearly as feasible, in its original position when excavating beyond the limits for paving.

1. Trench Widths: Trench width shall be in accordance with ASTM D2321 and shall be sufficient to ensure working room too properly and safely place and compact haunching and other backfill materials. Minimum trench width shall not be less than 1.25 times the pipe outside diameter plus 12 inches. On multiple pipe barrel runs the clear distance between pipes shall be 0.50 times the pipe diameter. The sides of the trenches shall be vertical and, should unstable soil be encountered, shall be braced for the safety. The floor of the trench will be excavated and graded so that the barrel of the pipe will have a continuous bearing throughout its length.

2. Obstructions: Remove obstructions to the proposed construction, including trees and other vegetation, debris and structures, over the width of the excavation to a depth of 1 foot below the bottom of excavation. Remove as required to clear the new structure and plug in an approved manner if abandoned storm drains, sewers, or other drainage structures are encountered. Restore the bottom of the excavation to grade by backfilling after removing obstructions in accordance with this Subsection. Dispose of surplus materials in accordance with federal, state and local regulations.

3. Excavations in Streets: Excavation in streets and alleys shall be in accordance with Subsection 4.01,"Utility Construction in City of Amarillo Right of Way and Easements."

4. De-Watering: Construct or place structures in the presence of water only if approved. Place precast pipe on a dry firm surface. Remove water by bailing or pumping or other approved methods.

Remove standing water in such a manner that does not allow water movement through or beside structures already placed unless approved. Area that is de-watered by be sealed off and dry for 36 hours before pipe can be placed. If area cannot be dewatered to the point the subgrade is free of mud, use flexible base, cement stabilized base or lean concrete. Provide concrete with at least 275 pounds of cement per cubic yard, if lean concrete is used place a minimum of 3 inches.

5. Unstable Material: Remove the material to a depth of no more than 2 feet below the grade of the pipe when unstable soil is encountered at established grades. Replace soil removed with stabile material in uniform layers no greater than 8 inches in depth (loose measurement). Each layer must have enough moisture to be compacted by rolling or tamping as required to provide a stabile foundation.

Use special materials such as flexible base, cement stabilized base, cement stabilized backfill, or other approved material when it is not feasible to construct a stable foundation as outlined above.

6. Incompressible Material: Remove incompressible material to 6 inches below the grade for bedding, backfill with an approved compressible material and compact by rolling or tamping.

B. Pipe Bedding: The pipe shall be carefully placed on a fine granular foundation according to the following table. The maximum Plasticity Index of bedding material shall be 12. The bedding shall be shaped to the pipe's lower part to a depth of at least 1/6 of the pipe outside diameter. Bedding depth is shown in Table 5.

Table 5
Bedding Depth

Pipe Diameter[1]	Bedding Depth
27 inches & smaller	3 inches
30 inches to 66 inches	4 inches
Over 66 inches	6 inches

[1]Pipe diameter is the outside diameter of the pipe.

C. Placement of Pipe

1. Laying Pipe: Start laying of pipe on the bedding at the outlet end with the tongue end pointing downstream, and proceed toward the inlet end with the abutting sections properly matched, true to the established lines and grades shown in the plans. Lay the pipe to form a smooth uniform conduit. Lower sections of pipe into trench without damaging the pipe or disturbing the bedding and the sides of the trench. Carefully clean the ends of the pipe before the pipe is placed. Prevent soil or bedding material from entering the pipe as it is laid. Lay the pipe in the trench, when elliptical pipe with circular reinforcing or circular pipe with elliptical reinforcing is used, so the markings for the top or bottom are no more than 5° from the vertical plane through the longitudinal axis of the pipe. Remove and re-lay, without compensation, pipe that is not in alignment or shows excessive settlement after laying.

Remove any existing plugs from pipes where pipes will be tied in existing stub outs.

Fill lift holes with concrete, mortar, or precast concrete plugs after the pipe in in place.

2. Alignment and Grade: All pipe shall be laid and maintained in proper alignment. The trench shall be excavated to lines and grades as shown on the plans. Departure from grade shall not exceed 1 inch per 10 linear feet and a maximum departure shall be limited to 1-1/2 inches. Departure from alignment shall not exceed 2 inches per 10 linear feet and the maximum departure shall be limited to 4 inches. Where necessary to deflect alignment from a straight line, the degree of deflection shall first be approved by the Project Representative. Lay multiple lines of RCP with the centerlines of the individual barrels parallel. Use the clear distances between outer surfaces of adjacent pipes shown in Table 6.

Table 6
Minimum Clear Distances Between Pipes

Full Circle Concrete Pipe (inches)	Arch Design Pipe	Elliptical Concrete Pipe	Clear Distance
18	1	1	9 inches
24	3	2	11 inches
30	4	4	1 foot 1 inch
36	5	6	1 foot 3 inches
42	6	8	1 foot 5 inches
48	7	9	1 foot 7 inches
54	8	10	1 foot 11 inches
60 to 84	9 & 10		2 feet

D. Jointing: Make available an appropriate rolling device similar to an automobile mechanic's "creeper" for conveyance through small-size pipe structures.

The connecting of one pipe run intersecting another pipe run shall be done in a workmanlike manner. The joint shall be buttered and completely filled with mortar, the interior surface of each pipe shall be smooth and free of any projection. The end of the pipe shall be temporarily plugged to keep rain, mud, animals, or foreign objects from entering the pipe during the cessation of pipe laying.

1. Joints Sealed with Hydraulic Cement Mortar: Use Type S mortar meeting the requirements of ASTM C270. Mortar can only be used when the air temperature is above 40°F, protect mortar from freezing for at least 24 hours by backfilling or other means. Clean and wet the pipe ends before ends before making the joint. Plaster the lower half of the groove and the upper half of the tongue with mortar. Pack mortar into the joint from both inside and outside the pipe after the pipes are tightly joined. Finish the inside smooth and flush with adjacent joints of pipe. Cure mortar joints by keeping the joints wet for 48 hours or until the backfill has been completed, whichever comes first. Mortar has to set at least 6 hours before backfilling can begin.

Driveway culverts do not require mortar banding on the outside of the pipe.

2. Joints Using Cold-Applied, Plastic Asphalt Sewer Joint Compound: Ensure both ends of the pipes are clean and dry. Place a ½ inch thick layer of the compound in the groove end of the pipe covering at least 2/3 of the joint face around the entire circumference. Shove home the tongue end of the next pipe with enough pressure to make a tight joint. Remove and excess mastic projecting into the pipe after the joint has been made. Backfill after the joint has been inspected and approved.

3. Joints Using Rubber Gaskets: Make the joint assembly according to the recommendations of the gasket manufacturer. Make joints watertight when using rubber gaskets. Backfill after the joint has been inspected and approved.

4. Joints Using Pre-Formed Flexible Joint Sealants: Install pre-formed flexible joint sealants in accordance with manufacturer's recommendations. Place the joint sealer so no dirt or other deleterious materials come in contact with the joint sealing material. Pull or push home the pipe with enough force to properly seal the joint. Remove and joint material pushed out into the interior of the pipe that would tend to obstruct the flow. Store pre-formed flexible joint sealants in an area warmed naturally or artificially to above 70°F in an approved manner when the atmospheric temperature is below 60°F. Apply flexible joint sealants to pipe joint immediately before placing pipe in trench, and connect pipe to previously laid pipe. Backfill after joint has been inspected and approved.

E. Connections and Stub Ends: Make connections of concrete pipe to existing pipes, inlets or junction boxes as shown on the plans.

Mortar or concrete the bottom of existing structures if necessary to eliminate and drainage pockets created by the connections. Repair any damage to the existing structure resulting from making the connections.

Make connections between concrete pipe and other pipes with a suitable concrete collar and a minimum thickness of 4 inches unless otherwise shown on the plans.

Finish stub ends for connections to future work not shown on the plans by installing watertight plugs into the free end of the pipe.

F. Backfill

1. The trench excavation under all paving and proposed paving of any nature shall be backfilled to the bottom of the subbase or base, or within 1 foot of the present surface where subbase elevation is not supplied with backfill type shown on the plans of the type shown below. The trench shall be considered under paving when any of the trench is in the subgrade, subbase, or other portions of the pavement.

Backfill will be done in a fashion that will not move the pipe or damage any joints.

The Contractor shall exercise extreme care in the backfilling of all trenches and especially those of greater depth. Any pipe that is damaged shall be removed and replaced immediately by the Contractor at his expense.

The backfill shall be compacted by pneumatic tamping in courses of not over 6 inches. If necessary for maximum compaction, water must be added at the Contractor's expense. The fill material must be thoroughly compacted. The Contractor shall maintain all surfaces until the project is finally accepted by the City of Amarillo. The fill material must be sufficiently moistened for maximum compaction, but care must be exercised that excess water is not placed in the ditch. Water jetting may be substituted for pneumatic tamping of the backfill with previous approval by the Engineer.

Final backfill material shall meet the requirements of ASTM D2321 Class II, Class III or Class IV material. All initial and final backfill material shall be placed in 6 inch lifts and compacted to a minimum 90% Standard Proctor Density. The contractor shall provide density reports and a Proctor on materials as requested by the City of Amarillo project representative. The descriptions for Class I, II and IV material are as shown below:

(1) Class I - Angular crushed stone or rock, dense or open graded with little or no fines (1/4 inch to 1 1/2 inches in size);

(2) Class II - Clean, coarse-grained material, such as gravel, coarse sands and gravel/sand mixtures (1 1/2 inches maximum in size); and

(3) Class III - Coarse grained material with fines including silty or clayey gravels or sands. Gravel or sand must comprise more than 50% of the Class III material (1 1/2 inches maximum size).

(4) Flowable backfill can be used for bedding material, as well as final backfill material meeting the requirements of Subsection 4.01 "Utility Construction in City of Amarillo Right-of-Way and Easements." Pipes shall be anchored when backfilling with flowable fill.

As soon as practicable after the completion of the laying and jointing of the pipe, the backfilling of the trench shall begin and at no time shall the completely backfilled trench be more than 500 feet behind the pipe laying. Pipe shall be laid each day up to the ditching machine at quitting time. Backfill material shall be deposited in the trench simultaneously on both sides of the pipe for the full width of the trench and to an elevation approximately 6 inches above the spring line of the pipe. Backfill material shall be compacted to 90% of Standard Proctor. Trench details, including bedding, haunching, initial backfill to 1 foot above the pipe, final backfill, and pipe zone, are shown in Figure 1. If

different types are used for backfill and in the pipe zone, a filter fabric shall be placed between these material the full width of the trench. Trench widths are shown in Section IV.A.1. Restoration of pavement shall be done in accordance will Subsection 4.01 "Utility Construction in City of Amarillo Right-of-Way and Easements."

Figure 1.

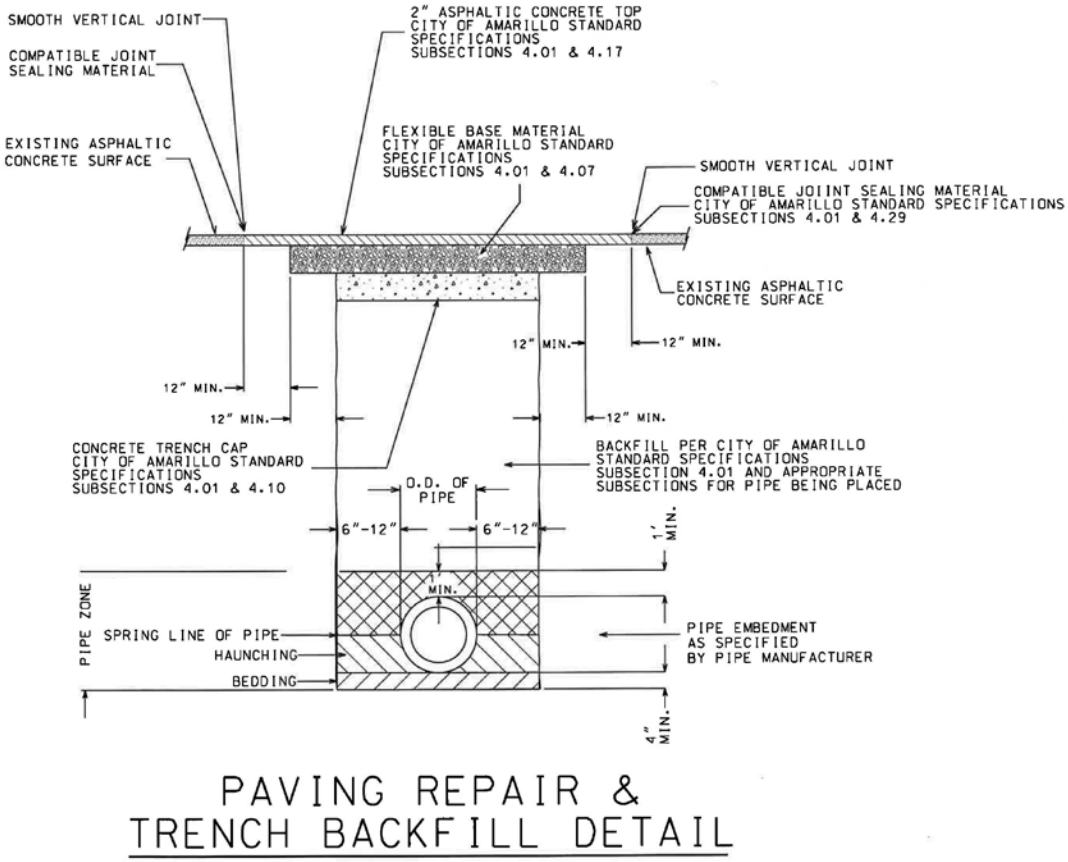

PAVING REPAIR &
TRENCH BACKFILL DETAIL

2. Minimum Cover for Pipe:

a) For the City of Amarillo and the ETJ areas, all pipes shall be placed a minimum of 18 inches below the base course. Variances from the minimum cover requirement must be submitted in writing to the City Engineer and approved by the City Engineer prior to commencing construction.

b) Extreme care should be taken when heavy construction equipment loads cross the pipe trench during construction. If the passage of construction equipment over an installed pipeline is necessary during construction, compacted fill in the form of a ramp shall be constructed to a minimum elevation of 3.0 feet over the top of the pipe. Any damaged pipe shall be replaced at the contractor's expense.

G. Protection of Work: It is the responsibility of the Contractor to protect his work against weather, vandals, and any and all things that may mar the finish, surface, or the appearance of the product.

The Contractor shall maintain proper crossings, to protect and to repair damaged property, to keep the backfill completed to acceptable limits, and to clean up waste materials and surplus excavation. Failure to do any or all of these things shall be just claim for the City of Amarillo to withhold estimates until such faults shall have been corrected.

Should the Contractor remove or damage any curbs, sidewalks, driveways, shrubbery, plants, trees, fences, sod, or any other private or public property outside of the normal trench width, he shall replace same to condition equal to or better than that before the work began at his own expense, furnishing all labor, materials, supplies, equipment, and any and all things necessary. Replacements within the normal trench width will be paid at the unit prices bid. Repairs and replacement are to be made as soon as practicable, in the opinion of the Engineer.

H. Protection of Public or Private Property: The Contractor shall exercise precautions to protect all property. Contractor is responsible for any and all damage to property either private or public, due to his operations.

Should roots or tree branches be removed or damaged, the damage claims resulting from such work shall be settled by the Contractor satisfactorily to the property owner.

The Contractor shall uncover pipes, tees, elbows, and other conduits or utilities which are close to the proposed pipe.

I. Clean Up: The Contractor shall remove all surplus construction materials, equipment, scraps, broken pipe, debris, and rubbish from the site and leave the site in a workmanlike manner. At no time shall complete cleanup be more than 1000 feet behind the laying of the pipe. Dust is to be kept at an absolute minimum by sweeping and/or wetting of fill in the ditch.

V. Measurement

All types of reinforced concrete pipe shall be measured in linear feet from the center of each inlet or junction box (when used). For multiple pipes, the measured length shall be the sum of the lengths of the barrels. The pipe shall be accepted by the test results, and by inspection. The pipe shall conform to these specifications as to design and freedom from defects. Any unacceptable portion of the pipe shall be replaced or repaired to meet the specifications at the expense of the Contractor.

VI. Payment

The work performed and all materials furnished as prescribed by this subsection and measured as provided under "Measurement" shall be paid for at the unit price bid for appropriate type of pipe in the proposal, which price shall be full compensation for excavating, trenching, removing and lacing plugs, placing all materials, backfilling and for all manipulations, labor, tools, equipment and incidentals necessary to complete the work.

LAST PAGE OF THIS SUBSECTION

Subsection 5.02
High-Density Polypropylene Storm Sewer Pipe

I. Scope: This subsection includes the construction of High-Density Polypropylene (HDPE) storm sewer lines as shown on the plans and itemized in the project proposal. The minimum acceptable storm sewer pipe size shall be 18 inch diameter. HDPE pipe will not be used under pavement.

Protection of Utilities: The Contractor shall familiarize himself with all utilities locations by consulting with the utility companies, private owners, and by visiting the site. All utility companies should cooperate in locating their properties. The Contractor shall protect utilities and repair all damage he may do at his expense and to the satisfaction of the affected utility company. Where sanitary sewers laterals or services, telephone, traffic or electrical conduits, poles, cables or poles, gas mains or services, water mains, or any other public utilities are encountered, proper protection shall be provided by means of blocks, supports or by some other means acceptable to the affected company or owner so that such property will remain intact and in service. All damage by the Contractor must be repaired in accordance with the affected utility company. Such repair must be done with the least inconvenience to the affected utility company.

II. Materials

A. General: HDPE pipe must be HP Storm pipe or equivalent.

B. HDPE Smooth Lined Pipe & Fittings:

HDPE pipe shall be manufactured in accordance with requirements of ASTM F 2736 and AASHTO M330 for pipe sizes 18 inches through 30 inches. HDPE pipe sizes 36 inches through 60 inches shall be manufactured in accordance with F 2881 and AASHTO M330, latest edition.

III. Equipment

The Contractor will supply sufficient equipment to excavate, lay and backfill the pipe in a safe and professional manner.

IV. Construction Methods

A. Excavation: Excavate to the lines and grade shown on the plans. Provide a stable and safe excavation up to 5 feet deep. Excavation protection for excavations deeper than 5 feet are governed by Subsection 5.08, "Trench Protection." Keep topsoil that been removed separate, and replace it, as nearly as feasible, in its original position when excavating beyond the limits for paving. Should rock be encountered during excavation, it shall be excavated to such a depth that no portion of the barrel of the pipe shall be closer than 3 inches to the rock. Blasting will not be permitted. The excavation widths for the type of backfill being used is shown in Table 1.

Table 1
Recommended Trench Width

Pipe Size (inches)	Backfill Types I, II and III	Flowable Fill Backfill
18	3 feet 3 inches	2 feet 9 inches
24	4 feet	3 feet 6 inches
30	4 feet 8 inches	4 feet 3 inches
36	5 feet 4 inches	4 feet 11 inches
42	6 feet	5 feet 6 inches
48	6 feet 8 inches	6 feet 2 inches
54	7 feet 4 inches	6 feet 10 inches
60	8 feet	7 feet 6 inches

1. Obstructions: Remove obstructions to the proposed construction, including trees and other vegetation, debris and structures, over the width of the excavation to a depth of 1 foot below the bottom of excavation. Remove as required to clear the new structure and plug in an approved manner if abandoned storm drains, sewers, or other drainage structures are encountered. Restore the bottom of the excavation to grade by backfilling after removing obstructions in accordance with this Subsection. Dispose of surplus materials in accordance with federal, state and local regulations.

2. De-Watering: Construct or place structures in the presence of water only if approved. Place precast pipe on a dry firm surface. Remove water by bailing or pumping or other approved methods.

Remove standing water in such a manner that does not allow water movement through or beside structures already placed unless approved. Area that is de-watered by be sealed off and dry for 36 hours before pipe can be placed. If area cannot be dewatered to the point the subgrade is free of mud, use flexible base, cement stabilized base orlean concrete. Provide concrete with at least 275 pounds of cement per cubic yard, if lean concrete is used, place a minimum of 3 inches.

3. Unstable Material: Remove the material to a depth of no more than 2 feet below the grade of the pipe when unstable soil is encountered at established grades. Replace soil removed with stabile material in uniform layers no greater than 8 inches in depth (loose measurement). Each layer must have enough moisture to be compacted by rolling or tamping as required to provide a stabile foundation.

Use special materials such as flexible base, cement stabilized base, cement stabilized backfill, or other approved material when it is not feasible to construct a stable foundation as outlined above.

4. Incompressible Material: Remove incompressible material to 6 inches below the grade for bedding, backfill with an approved compressible material and compact by rolling or tamping.

5. Handling of Pipe: Pipe shall not be dropped during delivery or placement. Pipe most be stored on an even surface. No not drag pipe on the ground or against other pipes. Do not store pipe in a total height over 5 feet.

B. Pipe Bedding: A minimum of 4 inches to 6 inches of bedding shall be placed and compacted to equalize load distribution. The same material that is used for backfill may be used for bedding. Bedding shall be Type I, Type II, or Flowable fill.

C. Pipe Laying: The pipe shall be laid with bell end facing the direction of laying and the spigot end as the discharge end. Laying shall commence at the discharge end of the line and precede upgrade. No pipe shall be laid in water or on soil that has been covered with water. If wet soil is encountered, the wet soil shall be removed and replaced with dry soil or sand thoroughly compacted to grade. The Contractor shall excavate trenches for the pipe and the pits for the manholes to proposed line and grade. Only excavation that is required for proper installation shall be done. Excavation which may be made below grade shall be brought up to grade with approved material and properly compacted. The Contractor shall keep the property owners and the general public from being inconvenienced. All street crossings, sidewalks, and entrances to public and private property shall be maintained. Should pipe excavation cross drainage paths, ditches and other conveyances so as to cause ponding in front of or along any property, the Contractor shall drain such locations immediately and prevent further ponding.

Each pipe joint and each fitting shall have full bearing on the entire length of its barrel. The Contractor shall check each pipe joint and each fitting before placing. Any pipe or fitting found defective shall be removed from the site. Any faulty pipe shall be removed and replaced by the Contractor. The trench for HDPE pipe shall be excavated to proper grade and alignment. Should the excavation be made below grade, all fills made to attain grade shall be in well compacted layers not over 4 inches.

1. Alignment and Grade: All pipe shall be laid and maintained in proper alignment. Where necessary to deflect alignment from a straight line, the degree of deflection shall first be approved by the Project Representative. Maintain the clear distances between outer surfaces of adjacent pipes given in Table 2.

Table 2
Minimum Clear Distances Between Pipes

Pipe Size (inches)	Minimum Pipe Spacing
18	1 foot
24	1 foot
30	1 foot 3 inches
36	1foot 6 inches
42	1 foot 9 inches
48	2 feet
54	2 feet 3 inches
60	2 feet 6 inches

2. Jointing of Pipes: Pipe shall be joined with a gasketed integral bell and spigot joint meeting the requirements of ASTM F2376 for 18 inch through 30 inch pipe and F2881 for 36 inch through 60 inch pipe.

Joints shall be watertight. Gasket material shall be installed by the manufacturer and covered with a removable protective wrap to ensure the gasket is free from debris. A joint lubricant shall be used on the gasket and bell during assembly. Lubricant must be approved by manufacturer. Pipes shall have a reinforced bell with a polymer composite band installed by the manufacturer.

Before laying the pipe in the trench, attach the plastic gasket sealer inside the tapered bell. Remove the paper wrapper from the gasket and press it firmly to the clean, dry pipe joint surface.

Before the pipe is lowered into the ditch, each joint shall be free of all foreign matter. The ends of each joint shall be thoroughly cleaned before joint material is applied. After the first joint of pipe is laid in any section, the next joint shall not be laid until the lower half of the joint is in place.

Upon the completion of the jointing, all pipe must be in true alignment and must be smooth throughout its interior walls, at all points along the joints and invert.

HDPE joints shall be installed such that the connection of pipe sections will form a continuous line free from irregularities in the flow line. All installations within City of Amarillo right-of-way shall require watertight joints that meet a 74 kPa (10.8 psi) laboratory test per ASTM D3212 and utilize a bell and spigot design with a gasket meeting ASTM F477.

All joints in all sizes of pipe shall be made in place in the ditch**.**

3. Connections and Stub Ends:

Mortar or concrete the bottom of existing structures if necessary to eliminate and drainage pockets created by the connections. Repair any damage to the existing structure resulting from making the connections.

Make connections between HDPE pipe and other pipes with a suitable concrete collar and a minimum thickness of 4 inches unless otherwise shown on the plans.

Finish stub ends for connections to future work not shown on the plans by installing watertight plugs into the free end of the pipe.

D. Backfilling of Storm Sewer Pipe

Backfill: Special care must be taken in the backfilling operation so that the joints are not disturbed. Any damage done shall be repaired immediately by the Contractor at his expense.

1. As soon as practicable after the completion of the laying and jointing of the pipe, the backfilling of the trench shall begin and at no time shall the completely backfilled trench be more than 500 feet behind the pipe laying. Pipe shall be laid each day up to the ditching machine at quitting time. Backfill material shall be deposited in the trench simultaneously on both sides of the pipe for the full width of the trench and to an elevation approximately 6 inches above the spring line of the pipe. Backfill material shall be compacted to 90% of Standard Proctor where applicable. Trench details, including bedding, haunching, initial backfill, final backfill 1 foot above the pipe, pipe zone are shown in Figure 1. If different types of backfill are used in the pipe zone and backfill, a filter fabric between these materials the full width of the trench. Trench widths are shown in Section IV.A. Restoration of pavement shall be done in accordance with Subsection 4.01, "Utility Construction in City of Amarillo Right-of-Way and Easements."

Figure 1

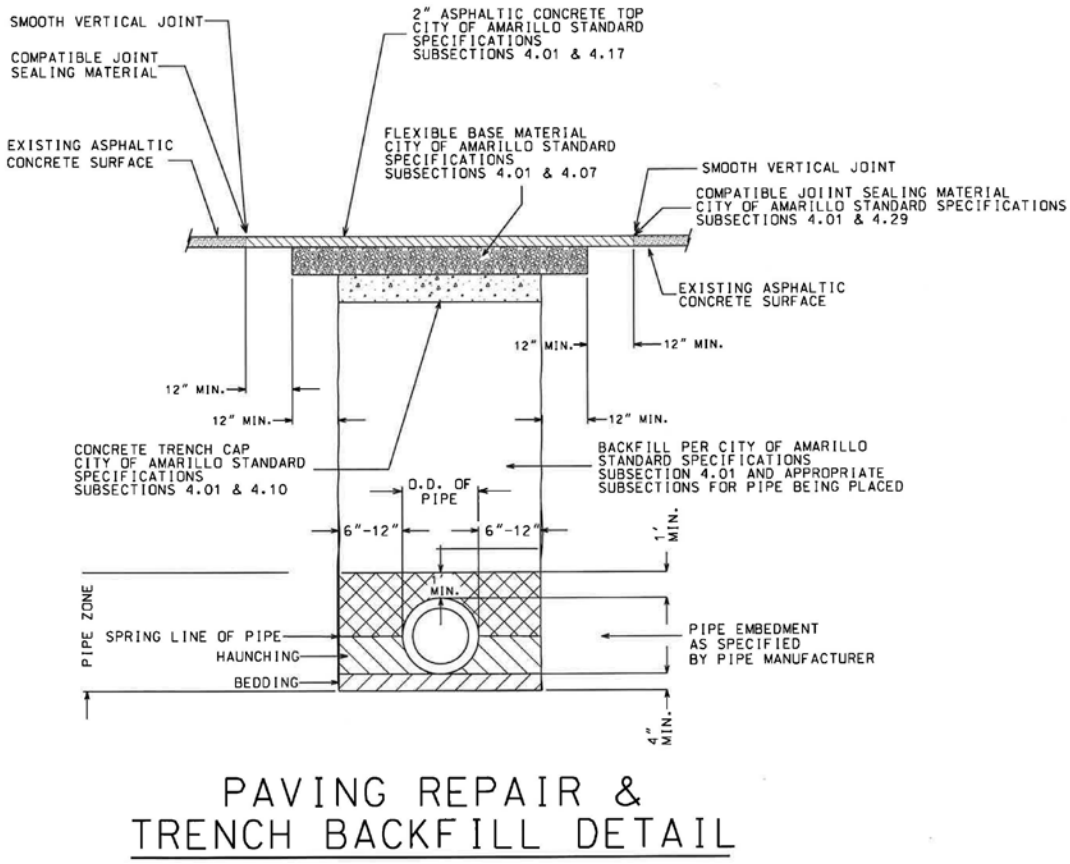

The Contractor shall exercise extreme care in the backfilling of all trenches and especially those of greater depth. Any pipe that is damaged shall be removed and replaced immediately by the Contractor at his expense.

Final backfill material shall meet the requirements of ASTM D2321 Class I Class II, Class III material or flowable fill. All initial and final backfill material shall be placed in 6 inch lifts and compacted to a minimum 90% Standard Proctor Density. It is important not to use mechanical compaction directly on top of the pipe. The contractor shall provide density reports and a Proctor on materials as requested by the City of Amarillo project representative. When using Class I bedding, mechanical compaction shall not be used, care shall be taken to eliminate voids around the pipe. Use a shovel to move material under and around the pipe as necessary to complete backfill operation. Care shall be taken using mechnical compactors next to the pipe until the entire pipe has been covered. The descriptions for Class I, II and III material and flowable fill are as shown below:

(1) Class I - Angular crushed stone or rock, dense or open graded with little or no fines (1/4 inch to 1 1/2 inches in size);

(2) Class II - Clean, coarse-grained material, such as gravel, coarse sands and gravel/sand mixtures (1 1/2 inches maximum in size);

(3) Class III - Coarse grained material with fines including silty or clayey gravels or sands. Gravel or sand must comprise more than 50% of the Class III material (1 1/2 inches maximum size); and

(4) Flowable backfill can be used for bedding material, as well as final backfill material meeting the requirements of Subsection 4.01, "Utility Construction in City of Amarillo Right-of-Way and Easements." Pipes shall be anchored when backfilling with flowable fill.

E. Minimum Cover for Pipe:

1. For the City of Amarillo and the ETJ areas, all pipe shall be placed a minimum of 18 inches below the bottom of the base course. Variances from the minimum cover requirement must be submitted in writing to the City Engineer and approved by the City Engineer prior to commencing construction.

2. Extreme care should be taken when heavy construction equipment loads cross the pipe trench during construction. If the passage of construction equipment over an installed pipeline is necessary during construction, compacted fill in the form of a ramp shall be constructed to a minimum elevation of 3.0 feet over the top of the pipe. Any damaged pipe shall be replaced at the contractor's expense.

F. Maximum Cover for Pipe: The maximum fill height for HDPE pipe shall be determined by the type of uniform backfill used and recommended trench width shown in Table 1 . Maximum uniform backfill heights are shown in Table 3.

Table3
Maximum Uniform Fill Heights

Pipe Diameter (inches)	Class I (feet)	Class II (feet)	Class III (feet)	Flowable Fill (feet)
18	36	25	19	36
24	31	22	16	31
30	33	23	17	33
36	32	22	16	32
42	32	22	16	32
48	31	21	15	31
60	34	23	16	34

G. Installation Deflection: At the Engineer's discretion, all pipe exceeding 5% deflection (as per AASHTO Section 30) may require replacement or re-compaction at the contractor's expense when measured or inspected not less than 30 days following completion of installation. Deflection is defined per ASTM D 2321.

The Contractor shall provide Video Camera (CCTV) inspection on 100% of flexible pipelines installed. The test shall be conducted at least 30 days after the installation of the pipeline. Mandreling of the pipe may be accepted as a suitable alternative for pipeline inspection and deflection testing, in lieu of CCTV inspection.

H. Protection of Work: It is the responsibility of the Contractor to protect his work against weather, vandals, and any and all things that may mar the finish, surface, or the appearance of the product.

The Contractor shall maintain proper crossings, to protect and to repair damaged property, to keep the backfill completed to acceptable limits, and to clean up waste materials and surplus excavation. Failure to do any or all of these things shall be just claim for the City of Amarillo to withhold estimates until such faults shall have been corrected.5

Should the Contractor remove or damage any curbs, sidewalks, driveways, shrubbery, plants, trees, fences, sod, or any other private or public property outside of the normal trench width, he shall replace same to condition equal to or better than that before the work began at his own expense, furnishing all labor, materials, supplies, equipment, and any and all things necessary. Replacements within the normal trench width will be paid at the unit prices bid. Repairs and replacement are to be made as soon as practicable, in the opinion of the Engineer.

I. Protection of Public or Private Property: The Contractor shall exercise precautions to protect all property. Contractor is responsible for any and all damage to property either private or public, due to his operations.

Should roots or tree branches be removed or damaged, the damage claims resulting from such work shall be settled by the Contractor satisfactorily to the property owner.

The Contractor shall uncover pipes, tees, elbows, and other conduits or utilities which are close to the proposed pipe.

J. Clean Up: The Contractor shall remove all surplus construction materials, equipment, scraps, broken pipe, debris, and rubbish from the site and leave the site in a workmanlike manner. At no time shall complete cleanup be more than 1000 feet behind the laying of the pipe. Dust is to be kept at an absolute minimum by sweeping and/or wetting of fill in the ditch.

V. Measurement

All pipes shall be measured in linear feet from the center of each inlet or junction box (when used). For multiple pipes, the measured length shall be the sum of the lengths of the barrels. The pipe shall be accepted by the test results, and by inspection. The pipe shall conform to these specifications as to design and freedom from defects. Any unacceptable portion of the pipe shall be replaced or repaired to meet the specifications at the expense of the Contractor.

VI. Payment

The work performed and all materials furnished as prescribed by this subsection and measured as provided under "Measurement" shall be paid for at the unit price bid for appropriate type of pipe in the proposal, which price shall be full compensation for excavating, trenching, plugging, placing all materials, backfilling and for all manipulations, labor, tools, equipment and incidentals necessary to complete the work.

LAST PAGE OF THIS SUBSECTION

Subsection 5.03
Corrugated Metal Storm Sewer Pipe

I. Scope: This subsection includes the construction of corrugated metal pipe (CMP) storm sewer lines as shown on the plans and itemized in the project proposal. The minimum acceptable storm sewer pipe size shall be 18 inch diameter.

Protection of Utilities: The Contractor shall familiarize himself with all utility locations by consulting with the utility companies, private owners, and by visiting the site. All utility should cooperate in locating their properties. The Contractor shall protect utilities and repair all damage he may do at his expense and to the satisfaction of the affected utility company. Where sanitary sewer laterals or services, telephone, traffic or electrical conduits, poles, cables or poles, gas mains or services, water mains, or any other public utilities are encountered, proper protection shall be provided by means of blocks, supports or by some other means acceptable to the affected company or owner so that such property will remain intact and in service. All damage by the Contractor must be repaired in accordance with the affected utility company. Such repair must be done with the least inconvenience to the affected utility company.

II. Materials

A. General: CMP must come from a plant that is on TxDOT's Material Producers List.

B. Pipe: This subsection applies to pipe and pipe-arch equivalents from 18 inch through 60 inch diameters and coating thicknesses 0.052 to 0.168 inch inclusive. Furnish corrugated metal pipe in accordance with Table 1.

Table 1
Specifications for Corrugated Metal Pipe

Pipe Type	AASHTO Specification
Galvanized Steel and Aluminum Steel	M 36
Aluminized Type 2	M 36
Polymer Coated	M 36 & M 245
Asphalt Coated	M 36
Aluminum	M 196

The pipe type and corresponding AASHTO designations are shown in Table 2.

Table 2
Corrugated Metal Pipe Types

Pipe Type	AASHTO Classification
Circular	Type I
Circular, smooth lined	Type IA
Circular, spiral rib	Type IR
Arch	Type II
Arch, Smooth lined	Type IIA
Arch, spiral rib	Type IIR

`

1. Sheets: The pipe shall be made from zinc coated iron or steel sheets which shall conform to ASTM A 929 and/or AASHTO M 218.

2. Sheet Manufacturer's Guarantee: The manufacturer of the sheets shall submit a guarantee providing that all metal furnished shall conform to the specification requirements, shall bear a suitable identification brand or mark, and shall be replaced without cost to the purchaser when not in conformity with the specified analysis, gauge, or spelter coating; and the guarantee shall be so worded as to remain in effect so long as the manufacturer continues to furnish material.

3. Bolts and Nuts

a) For bolted pipe seams, bolts shall conform to ASTM A 449 and nuts shall conform to ASTM A 563 Grade C.

b) For connecting bands and miscellaneous fasteners, bolts and nuts shall conform to ASTM A 307 Grade A.

c) Bolts and nuts shall be zinc coated.

4. Fabrication

Corrugations: Pipe and pipe-arch shall be fabricated with annular corrugations in riveted, bolted or resistance spot welded lap construction or fabricated with helical corrugations and a continuous lock or welded seam.

a) The corrugations shall form smooth continuous curves and tangents. The radius of curvature of any corrugation profile shall be at least one-half the depth of the corrugation. The corrugations shall be either annular or helical. The direction of the crests and valleys of the helical corrugations shall be not less than 50° from the longitudinal axis of the pipe.

b) The average inside diameter of circular pipe and pipe-arch equivalents shall not vary more than 2% or 1 inch, whichever is greater, from the nominal diameter when measured on the inside crest of the corrugations. See Tables 3 and 4.

Table 3
Steel Pipe Arch
2-2/3 inch x ½ inch Corrugations

Design Size	Span Inches	Rise Inches	Minimum Cover Inches	Minimum Gauge Required	Coated Thickness Inches	Equivalent Circle Pipe Inches
2	21	15	12	16	0.064	18
2A	23	19	12	16	0.064	21
3	28	20	12	16	0.064	24
4	35	24	12	16	0.064	30
5	42	29	12	14	0.079	36
6	49	33	12	14	0.079	42
7	57	38	12	12	0.109	48
8	64	43	12	12	0.109	54
9	71	47	12	10	0.138	60

Table 4
Aluminum Pipe Arch
2-2/3 inch x ½ inch Corrugations

Design Size	Span Inches	Rise Inches	Minimum Cover Inches	Minimum Gauge Required	Coated Thickness Inches	Equivalent Circle Pipe Inches
2	21	15	12	16	0.060	18
2A	23	19	12	16	0.060	21
3	28	20	12	14	0.075	24
4	35	24	12	14	0.075	30
5	42	29	18	12	0.105	36
6	49	33	18	12	0.105	42
7	57	38	18	10	0.135	48
8	64	43	18	10	0.135	54
9	71	47	18	8	0.164	60

5. Lock or Continuous Welded Seams: Lock seams or continuous welded seams shall be so constructed as not to form an element of weakness.

6. Resistance Spot Welded Seams:

a) Resistance spot welds may be placed in valleys or crests or on tangents of corrugations. Longitudinal seams shall be welded with one spot in each corrugation except the longitudinal seams of all pipe 42 inches or more in diameter and all sizes or pipe having 1 inch deep corrugations which shall be welded with two spots in each corrugation. Circumferential shop welded seams shall have a maximum spot spacing of 6 inches except that 6 spots will be sufficient in 12 inch pipe**.**

b) The near edge of each spot weld shall be at least 1/16 inch from the edges of the metal sheets.

c) The welding shall be performed in such a manner that 1, the exterior surfaces of 90% or more of the spot welds on a length of pipe shall show no evidence of melting or burning of the base metal; and 2, base metal shall not be exposed when the area adjacent to the electrode contact surface area is wire brushed. Discoloration of the spot weld surfaces will not be cause for rejection.

d) Welding machines shall be qualified by a tension shear test for each combination of sheet thickness (gauge) or machine adjustment. Each test shall consist of two tension specimens.

e) Each specimen shall be prepared by lapping two 1-1/2 inch minimum wide x 5 inch long strips of corrugated culvert sheet representative of the material to be welded in production and joining them together with a single spot weld. The lap width and spot weld size shall be that which will be used in production. The longer axis of the specimen shall be parallel to the direction of rolling. Each specimen shall be welded after the resistance spot welding machine has been properly adjusted for the sheet thickness (gauge) and brand.

7. Couplers: Furnish coupling bands and other hardware for galvanized or aluminum steel pipe in accordance with AASHTO M 36 for steel pipe and AASHTO M 196 for aluminum pipe. Use coupling bands that are no more than 3 nominal sheet thicknesses lighter than the thickness of the pipe to be connected or no lighter than 0.052 inches for steel or 0.048 inches for aluminum. Provide coupling bands made of the same base metal and coating as the pipe.

8. Workmanship and Finish: The completed pipe shall show careful, finished workmanship. Pipe on which the spelter coating has been bruised or broken either in the shop or in shipping, or which shows defective workmanship, shall be rejected. The following defects are specified as constituting poor workmanship and the presence of any or all of them in any individual pipe shall constitute sufficient cause for rejection.

a) Uneven laps;

b) Variation from shape;

c) Variation from a straight center line;

d) Ragged or diagonal sheared edges;

e) Loose, unevenly lined or spaced rivets, bolts, spot welds;

f) Poorly formed rivet heads or lock seams;

g) Illegible brand;

h) Bruised, scaled, or broken spelter coating; and

i) Dents or bends.

9. Repair of Damaged Spelter Coating: Units on which the spelter coating has been burned by flame cutting and gas or arc welding, or otherwise damaged in fabrication, shall be wire brushed and painted with 2 coats of a zinc dust zinc oxide paint conforming to Federal Specification TT-P-641.

10. Inspection: The pipe fabricator shall furnish a certificate stating compliance with this specification as required for each project, showing the quantities of fabricated material.

III. Equipment

The Contractor will supply sufficient equipment to excavate, lay and backfill the pipe in a safe and professional manner.

IV. Construction Methods

A. Excavation: Excavate to the lines and grade shown on the plans. Provide a stable and safe excavation up to 5 feet deep. Excavation protection for excavations deeper than 5 feet are governed by Subsection 5.08, "Trench Protection." Keep topsoil that been removed separate, and replace it, as nearly as feasible, in its original position when excavating beyond the limits for paving.

1. Trench Widths: Trench width shall be in accordance with ASTM D2321 and shall be sufficient to ensure working room too properly and safely place and compact haunching and other backfill materials. Minimum trench width shall not be less than 1.25 times the pipe outside diameter plus 12 inches. On multiple pipe barrel runs the clear distance between pipes shall be 0.50 times the pipe diameter. The sides of the trenches shall be vertical and, should unstable soil be encountered, shall be braced for the safety. The floor of the trench will be excavated and graded so that the barrel of the pipe will have a continuous bearing throughout its length.

2. Obstructions: Remove obstructions to the proposed construction, including trees and other vegetation, debris and structures, over the width of the excavation to a depth of 1 foot below the bottom of excavation. Remove as required to clear the new structure and plug in an approved manner if abandoned storm drains, sewers, or other drainage structures are encountered. Restore the bottom of the excavation to grade by backfilling after removing obstructions in accordance with this Subsection. Dispose of surplus materials in accordance with federal, state and local regulations.

3. De-Watering: Construct or place structures in the presence of water only if approved. Place precast pipe on a dry firm surface. Remove water by bailing or pumping or other approved methods.

Remove standing water in such a manner that does not allow water movement through or beside structures already placed unless approved. Area that is de-watered by be sealed off and dry for 36 hours before pipe can be placed. If area cannot be dewatered to the point the subgrade is free of mud, use flexible base, cement stabilized base or lean concrete. Provide concrete with at least 275 pounds of cement per cubic yard, if lean concrete is used place a minimum of 3 inches.

4. Unstable Material: Remove the material to a depth of no more than 2 feet below the grade of the pipe when unstable soil is encountered at established grades. Replace soil removed with stabile material in uniform layers no greater than 8 inches in depth (loose measurement). Each layer must have enough moisture to be compacted by rolling or tamping as required to provide a stabile foundation.

Use special materials such as flexible base, cement stabilized base, cement stabilized backfill, or other approved material when it is not feasible to construct a stable foundation as outlined above.

5. Incompressible Material: Remove incompressible material to 6 inches below the grade for bedding, backfill with an approved compressible material and compact by rolling or tamping.

B. Pipe Bedding: The pipe shall be carefully placed on a granular foundation according to the following table. The maximum PI of material shall be 12. The bedding shall be shaped to the pipe's lower part to a depth of at least 1/6 of the pipe outside diameter. The remainder of the pipe shall backfilled to at least 6 inches above its top by natural materials, placed and tamped to completely fill all spaces adjacent to the pipe. Bedding depth is shown in Table 5.

Table 5
Bedding Depth

Pipe Diameter	Bedding Depth
27" & smaller	3"
30" to 60"	4"

C. Pipe Laying: Lay pipes on the bedding from the outlet end and join the separate sections with outside laps of annular joints pointing upstream and longitudinal laps on the sides unless otherwise authorized. Coat any metal in joints not protected by galvanizing or aluminizing with a suitable asphalt paint. Lower sections of pipe into the trench without damaging the pipe or disturbing the bedding and the sides of the trench. Remove and re-lay, without compensation, pipe that is not in alignment or shows excessive settlement after laying. Lay multiple installations of corrugated metal pipe and pipe arches with the centerlines of individual barrels parallel. Maintain the clear distances between the outer surfaces of adjacent pipes given in Table 6 unless otherwise indicated on the plans.

Table 6
Minimum Clear Distances Between Pipes

Full Circle Pipe Inches	Arch Design Pipe	Distance Between Pipes
18	2	1 foot 2 inches
24	3	1 foot 5 inches
30	4	1 foot 8 inches
36	5	1 foot 11 inches
42	6	2 feet 2 inches
48	7	2 feet 5 inches
54	8	2 feet 10 inches
60	9	3 feet 2 inches

1. Jointing of Pipes: Provide field joints that maintain pipe alignment during construction and prevent infiltration of side material during the life of the installation. Provide one of the following jointing system unless otherwise shown on the plans. All joints in all sizes of pipe shall be made in place in the ditch.

a) Coupling Bands: Use coupling bands with annular corrugations only with pipe with annular corrugations or with helical pipe or spiral rib pipe in which the ends have been rerolled to form annular corrugations. Provide bands with corrugations that have the same dimensions at the corrugations in the pipe end or are designed to engage the first and second corrugation from the end of each pipe. The band may also include a U-shaped channel to accommodate upturned flanges on the pipe.

Field-join with helically corrugated bands or bands with projections (dimples) when helical end corrugations are allowed.

Coupling bands with projections may be used with pipe that has annular or helical end corrugations or spiral ribs. Provide bands formed with the projections in annular rows with 1 projection for each corrugation of helical pipe or spiral rib pipe. Provide 2 annular rows for bands 10-1/2 inches or 12 inches wide and 4 annular rows of projections for bands 16-1/2 inches or 22 inches wide.

Use a coupling band width that conforms to Table 7. Connect the bands using suitable galvanized devices in accordance with AASHTO M 36. Lap coupling bands equally on each of the pipes to form a tightly closed joint after installation. Provide at least the minimum coupling band width recommended by the manufacturer for corrugations not shown in Table 7.

Table 7
Coupling Band Width Requirements

Nominal Corrugation Size[1] (inches)	Nominal Pipe Inside Diameter[2] (inches)	Minimum Coupling Band Width (inches)		
		Annular Corrugated Bands	Helically Corrugated Bands	Bands with Projections
2-2/3 by 1/2	18 to 36	7	12	10-1/2
2-2/3 by 1/2	42 to 60	10-1/2	12	10-1/2

[1]For helically corrugated pipe or spiral rib pipe with rerolled ends, the nominal size refers to the dimensions of the end of corrugations in the pipe.
[2]Equivalent circular diameter for Type II pipe.

The minimum diameter of bolts for coupling bands is 3/8 inch for pipe diameter of 18 inches and ½ inch for diameters 21 inches and greater. Provide at least 2 bolts for bands 12 inches wide or less. Provide at least 3 bolts for bands wider than 12 inches.

Provide galvanized hardware in accordance with Subsection 4.33, "Metal Beam Guard Fence."

The connecting of one pipe run intersecting another pipe run shall be done in a workmanlike manner. The end of the pipe shall be temporarily plugged to keep rain, mud, animals, or foreign objects from entering the pipe during the cessation of pipe laying.

D. Backfilling of Storm Sewer Pipe

1. As soon as practicable after the completion of the laying and jointing of the pipe, the backfilling of the trench shall begin and at no time shall the completely backfilled trench be more than 500 feet behind the pipe laying. Pipe shall be laid each day up to the ditching machine at quitting time. Backfill material shall be deposited in the trench simultaneously on both sides of the pipe for the full width of the trench and to an elevation approximately 6 inches above the spring line of the pipe. Density will be comparable to existing material on areas outside the roadway.

The Contractor shall exercise extreme care in the backfilling of all trenches and especially those of greater depth. Any pipe that is damaged shall be removed and replaced immediately by the Contractor at his expense.

Special care must be taken in the backfilling operation so that the joints are not disturbed. Any damage done shall be repaired immediately by the Contractor at his expense.

The backfill shall be compacted by pneumatic tamping in courses of not over 6 inches. If necessary for maximum compaction, water must be added at the Contractor's expense. The fill material must be thoroughly compacted. The Contractor shall maintain all surfaces until the project is finally accepted by the City of Amarillo. The fill material must be sufficiently moistened for maximum compaction, but care must be exercised that excess water is not placed in the ditch. Water jetting may be substituted for pneumatic tamping of the backfill with previous approval by the Engineer.

2. Backfill (Under Existing or Proposed Paving in Right-of Way): The trench excavation under all paving and proposed paving of any nature shall be backfilled as shown in Figure 1. Backfill with types shown below unless specific type is called for on the plans. The trench shall be considered under paving when any of the trench is in the subgrade, subbase, or other portions of the pavement. Trench details, including bedding, haunching, initial backfill to 1 foot above the pipe, final backfill, and pipe zone, are shown in Figure 1. If different types are used for backfill and in the pipe zone, a filter fabric shall be placed between these material the full width of the trench. Trench widths are shown in Section IV.A.1. Restoration of pavement shall be done in accordance will Subsection 4.01 "Utility Construction in City of Amarillo Right-of-Way and Easements."

Figure 1

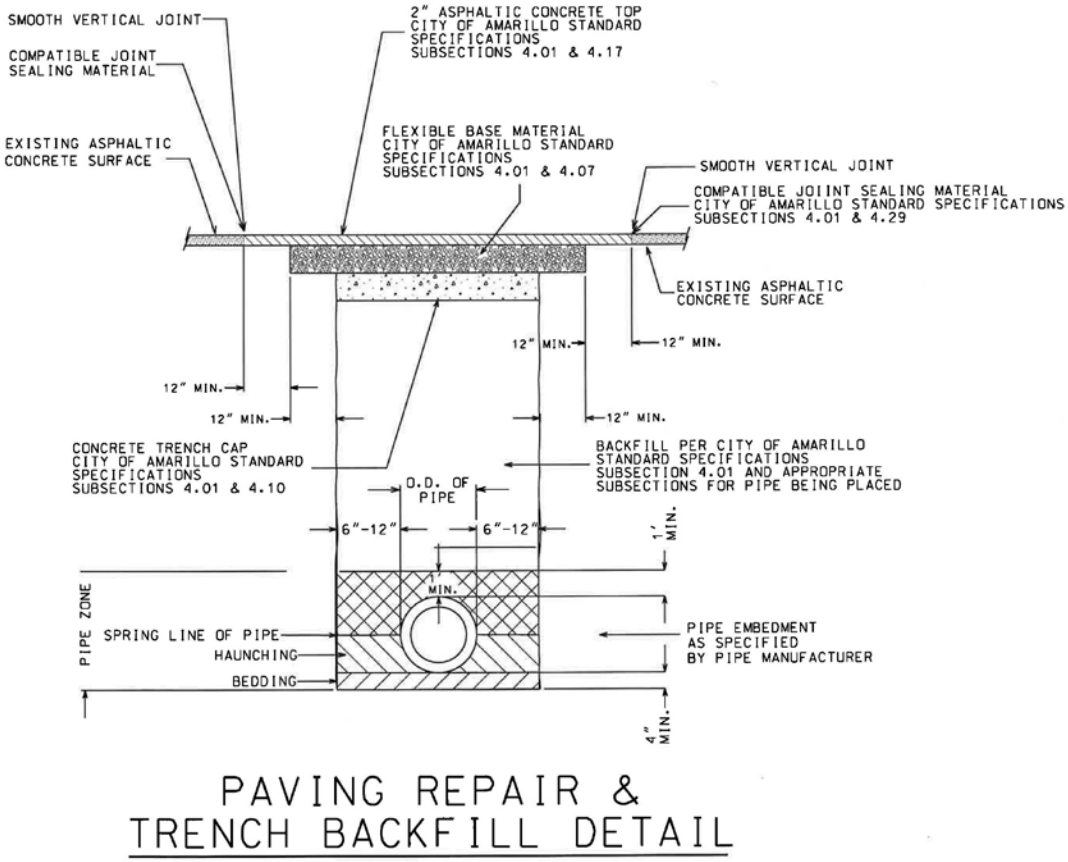

Final backfill material shall meet the requirements of ASTM D2321 Class II or Class III material. All initial and final backfill material shall be placed in 6 inch lifts and compacted to a minimum 90% Standard Proctor Density. The contractor shall provide density reports and a Proctor on materials as requested by the City of Amarillo project representative. The descriptions for Class I, II, III, and IV material are as shown below:

(1) Class I - Angular crushed stone or rock, dense or open graded with little or no fines (1/4 inch to 1 1/2 inches in size);

(2) Class II - Clean, coarse-grained material, such as gravel, coarse sands and gravel/sand mixtures (1 1/2 inches maximum in size); and

(3) Class III - Coarse grained material with fines including silty or clayey gravels or sands. Gravel or sand must comprise more than 50% of the Class III material (1 1/2 inches maximum size). Class III backfill cannot be used for HDPE pipe.

(4) Flowable backfill can be used for bedding material, as well as final backfill material meeting the requirements of Subsection 4.01 "Utility Construction in City of Amarillo Right-of-Way and Easements." Pipes shall be anchored when backfilling with flowable fill.

E. Minimum Cover for Pipe:

1. For the City of Amarillo and the ETJ areas, all pipe shall be placed a minimum of 18 inches below the bottom of base course. Variances from the minimum cover requirement must be submitted in writing to the City Engineer and approved by the City Engineer prior to commencing construction.

2. Extreme care should be taken when heavy construction equipment loads cross the pipe trench during construction. If the passage of construction equipment over an installed pipeline is necessary during construction, compacted fill in the form of a ramp shall be constructed to a minimum elevation of 4.0 feet over the top of the pipe. Any damaged pipe shall be replaced at the contractor's expense.

F. Installation Deflection: At the Engineer's discretion, all pipe exceeding 5% deflection (as per AASHTO Section 30) may require replacement or re-compaction at the contractor's expense when measured or inspected not less than 30 days following completion of installation. Deflection is defined per ASTM D 2321.

The Contractor shall provide Video Camera (CCTV) inspection on 100% of flexible pipelines installed. The test shall be conducted at least 30 days after the installation of the pipeline. Mandreling of the pipe may be accepted as a suitable alternative for pipeline inspection and deflection testing, in lieu of CCTV inspection.

G. Pavement Cuts: Repairing pavement cut will be in accordance with Subsection 4.01, "Utility Construction in City of Amarillo Right of Way and Easements."

1. Protection of Work: It is the responsibility of the Contractor to protect his work against weather, vandals, and any and all things that may mar the finish, surface, or the appearance of the product.

The Contractor shall maintain proper crossings, to protect and to repair damaged property, to keep the backfill completed to acceptable limits, and to clean up waste materials and surplus excavation. Failure to do any or all of these things shall be just claim for the City of Amarillo to withhold estimates until such faults shall have been corrected.

Should the Contractor remove or damage any curbs, sidewalks, driveways, shrubbery, plants, trees, fences, sod, or any other private or public property outside of the normal trench width, he shall replace same to condition equal to or better than that before the work began at his own expense, furnishing all labor, materials, supplies, equipment, and any and all things necessary. Replacements within the normal trench width will be paid at the unit prices bid. Repairs and replacement are to be made as soon as practicable, in the opinion of the Engineer.

2. Protection of Public or Private Property: The Contractor shall exercise precautions to protect all property. Contractor is responsible for any and all damage to property either private or public, due to his operations.

Should roots or tree branches be removed or damaged, the damage claims resulting from such work shall be settled by the Contractor satisfactorily to the property owner.

The Contractor shall uncover pipes, tees, elbows, and other conduits or utilities which are close to the proposed pipe.

3. Clean Up: The Contractor shall remove all surplus construction materials, equipment, scraps, broken pipe, debris, and rubbish from the site and leave the site in a workmanlike manner. At no time shall complete cleanup be more than 1000 feet behind the laying of the pipe. Dust is to be kept at an absolute minimum by sweeping and/or wetting of fill in the ditch.

V. Measurement

All types of pipes shall be measured in linear feet from the center of each inlet or junction box (when used). For multiple pipes, the measured length shall be the sum of the lengths of the barrels. The pipe shall be accepted by the test results, and by inspection. The pipe shall conform to these specifications as to design and freedom from defects. Any unacceptable portion of the pipe shall be replaced or repaired to meet the specifications at the expense of the Contractor.

VI. Payment

The work performed and all materials furnished as prescribed by this subsection and measured as provided under "Measurement" shall be paid for at the unit price bid for appropriate type of pipe in the proposal, which price shall be full compensation for excavating, trenching, plugging, placing all materials, backfilling and for all manipulations, labor, tools, equipment and incidentals necessary to complete the work.

LAST PAGE OF THIS SUBSECTION

Subsection 5.04
Cast-in-Place Concrete Storm Sewer Pipe

I. Scope: This subsection includes the construction of machine cast-in-place storm monolithic nonreinforced concrete sewer lines as shown on the plans and itemized in the project proposal. The minimum acceptable storm sewer pipe size shall be 18 inch diameter.

II. Materials: Cast-in-place pipe shall be 4,000 psi concrete. The concrete shall meet the requirements of Subsection 4.08, "Concrete", except as noted otherwise herein or on the plans.

The coarse aggregate grading for pipe diameters 48 inches or less shall conform to coarse aggregate Grade 3 as outlined in Subsection 4.08, "Concrete." For pipe diameters over 48 inches, use coarse aggregate Grade 2 as outlined in Subsection 4.08, "Concrete."

No concrete having a slump in excess of 2 inches will be permitted for use in pipes with diameters of 48 inches and larger. For pipes with diameters less than 48 inches, no concrete having a slump in excess of 3 inches will be permitted for use.

At the option of the Contractor, sections of precast reinforced concrete pipe (Class III) may be substituted for cast in place concrete pipe. Pipe and installation shall conform to the requirements of Subsection 5.01, "Reinforced Concrete Pipe."

III. Pipe Making Equipment: Construct pipe with equipment specially designed for constructing cast-in-place monolithic concrete pipe. The equipment shall be acceptable to the ODR. The Contractor shall be required to furnish evidence of successful operation in other work of the equipment he proposes to use. Equipment not suitable to produce the quality of work required for the pipeline will not be permitted to operate on the project.

A. Dimensions and Tolerances: The design shell thickness shall be specified in Table 1

Table 1
Minimum Shell Thickness

Internal Diameter (inches)	Minimum Shell Thickness (inches)
18	2
24	2-1/2
30	3
36	3-1/2
42	4
48	5
54	5-1/2
60	6
66	6-1/2
72	7
84	8
96	9
108	10
120	11

Variation in the internal diameter shall not exceed plus or minus 3 percent. The maximum allowable deviation from true grade of the design invert of the pipe shall not exceed ½ inch either side of true grade. Where deviation from true grade occurs, true grade shall be re-established at a maximum departure of 1/8 inch per foot.

IV. Construction

A. Excavation: Excavation shall be in accordance with Subsection 5.09, "Excavation and Backfill for Structures", except as modified herein. The trench shall be excavated in the lines and grades shown on the plans, or as directed by the ODR or Engineer. The width of the trench shall only be sufficient to accommodate travel of the pipe machine. The bottom of the trench shall be shaped to the nominal outside circumference of the pipe. Excavation shall performed from the outlet to the inlet. If the trench is over-excavated for the bottom 210 degrees of the pipe the excess area shall be filled with concrete. If rock is encountered, it will be removed at least 6 inches below the bottom of the pipe and the trench refilled with material sufficiently compacted to allow operation of the machine and provide a smooth firm surface.

B. Placing Concrete for Pipe: All surfaces against which concrete is to be placed shall be free from standing water, mud, and debris. Absorptive surfaces against which concrete is to be placed shall be moistened thoroughly so that moisture will not be drawn from the freshly placed concrete.

The concrete shall be placed in one operation around the full circumference of the pipe by means of a traveling form. The forms shall be of sufficient strength to withstand vibrating or tamping the concrete and to permit workmen to walk on the forms without causing springing or bulging at any point.

As the traveling form moves forward, forms shall be placed inside the newly formed pipe to support a minimum of 230 degrees of the upper portion of the pipe.

The concrete shall be vibrated, rammed, tamped or worked with suitable appliances until the concrete has been consolidated to the maximum practicable density, free of rock pockets, and closes snugly against all surfaces of forms and provides a bond between the pipe shell and supporting earth.

When placing operations cease for any reason, the end of the pipe shall be left rough with a slope of approximately 45 degrees. The ends of the pipeline shall be covered with canvas or other suitable cover material to prevent excessive loss of moisture from the interior of the pipe already placed.

When starting pipe laying operation from a previously laid cast-in-place pipe or section of precast pipe, a construction joint shall be made by excavating a bell completely around the end of the existing pipe and constructing a concrete collar to extend at least one foot either side of the joint with a minimum thickness equal to that of the wall of the pipe. Te end of the existing pipe shall be clean and damp before continuing pipe making operations. Cleaning construction joints shall consist of removing all laitance, loose or defective concrete, coatings and any other deleterious materials.

All forms shall be clean and shall be placed at the trench side at the location of their proposed use for inspection by the Project Representative. Forms which are defective in any way will not be used and, upon condemnation, they shall be removed from the work site. The forms shall not vary more than ½ inch from the lower edge of a straightedge laid parallel to the centerline of the form, and shall be free of any holes larger than 5/8 inch in the greatest dimension. The pipe machine shall be thoroughly clean and serviced prior to the placing of the concrete. Particular attention will be given to all parts of the machine with which concrete comes into contact.

Concrete chutes or trucks shall be provided to reach within 1 foot of the pipe machine hopper. The end of the chute or truck shall discharge the concrete at the center of the hopper. Provisions shall be maintained to minimize segregation of the concrete mix in all phases of the operation.

Delays in placing shall be handled as follows or as otherwise directed. The concrete hopper on the pipe laying machine shall be kept half full at all times, however, when placing operations cease or are delayed for any reason for more than 20 minutes, the pipe machine shall be pulled forward until all the concrete is exhausted and until the top troweling skirt is clear of concrete. If the pipe laying operation proceeds within one hour of the time of the last placement, no further steps need to be taken. However, if longer than one hour has elapsed, then a construction joint must be made as previously described. Leave the end of the pipe rough and at the natural slope when the machine is moved forward.

All junctions of pipe shall be provided for at the time the cast-in-place pipe is placed.

Inside forms shall be removed from the pipe not sooner than 4 hours nor longer than 24 hours after placement of the concrete. Care shall be taken when removing forms to prevent damage to the pipe. The inside of the pipe shall be carefully inspected for imperfections in placement, and any repairs or smoothing shall be made immediately to

provide a uniform interior surface. No wash, mortar or concrete shall be applied to a surface not properly moistened and cleaned. Visible cracks that appear to go through the shell shall be grooved and filled with mortar. All construction operations and methods for providing a water tight pipe shall be the responsibility of the Contractor. Mortar shall consist of 4 parts cement, one part fireclay. The finished surface of the concrete pipe shall be substantially free of fractures, cracks, and surface roughness.

The Contractor shall design, produce, transport, and place the strength of concrete in accordance with requirements of this subsection. The Contractor will perform quality assurance (QA) testing at the scope and frequency outlined in Table 2. QA testing conducted by the Contractor will be submitted to the ODR for review to determine payment and make acceptance decisions. The Contractor may perform quality control (Q/C) testing. The Contractor is allowed to submit Q/C testing to the ODR. The ODR reserves the right to take additional Q/A tests.

Table 2
Concrete Testing Frequency

Test For	Test Number	Sampling Location	Frequency of Testing	Remarks
Compressive Strength	Tex-418-A	At point of placement	4 cylinders for each 100 CY or fraction thereof for 4000 psi concrete.	Sampling shall be in accordance with Tex-407-A. 2 cylinders shall be tested at 7 days and if the average is below the design strength as defined in Table 1 of Subsection 4.08 "Concrete", the remaining 2 cylinders shall be tested at 28 days. If the average value of the 2 cylinders broken at 7 days meets the design strength the 2 remaining cylinders are not required to be tested.
Slump	Tex-415-A	At point of placement	When cylinders are taken.	Slump shall be 3" maximum.
Entrained Air	Tex-416-A or Tex-414-A	At point of placement	When cylinders are taken.	A minimum of 3% and a maximum of 7% entrained air is required.
Temperature	Tex-422-A	At point of placement	When cylinders are taken.	The maximum temperature at placement is 90˚F.

C. Curing Concrete: Immediately after the concrete is placed, the exposed surface of the concrete shall be cured by one of the following methods:

1. A 6 inch layer of backfill material consisting of damp, fine earth may be placed over the pipe immediately after the concrete has hardened sufficiently to prevent injury to the pipe from backfill operations. Initial backfill shall be kept moist until covered with final backfill.

2. Cover the exposed pipe with a sheet of polyethylene film sealed with dirt along the edges. Film needs to be at least 4 mils thick.

During the curing period following the placement of the concrete, the ends of the pipeline and all other openings into the pipeline shall be covered with canvas or other suitable material, except at locations where work is actually in progress. The inside surface of the pipeline shall not be cured.

D. Minimum Cover for Pipe:

1. For the City of Amarillo and the ETJ areas, all pipe shall be placed a minimum of 18 inches below the bottom of base course. Variances from the minimum cover requirement must be submitted in writing to the City Engineer and approved by the City Engineer prior to commencing construction.

E. Final Backfill: Quality of backfill will be in accordance with Subsection 5.01, "Reinforced Concrete Pipe." Pipe placed under roadway shall have surface repaired according to Subsection 4.01, "Utility Construction in City of Amarillo Right of Way and Easements." No backfill other than permitted for curing purposes shall be placed until the line has been inspected and approved. The trench may be completely backfilled after the pipe has been in place at least 24 hours and the concrete has acquired a flexural strength of not less than 300 psi. Light traffic, axle load less than 6,000 pounds, may be routed over the pipe after backfill has been completed for 24 hours. Unrestricted traffic may be permitted over the pipe after the backfill has been placed for 48 hours.

V. Measurement: Pipes shall be measured in linear feet from the center of each inlet or junction box (when used). For multiple pipes, the measured length shall be the sum of the lengths of the barrels. The pipe shall be accepted by the test results, and by inspection. The pipe shall conform to these specifications as to design and freedom from defects. Any unacceptable portion of the pipe shall be replaced or repaired to meet the specifications at the expense of the Contractor.

VI. Payment: The work performed and all materials furnished as prescribed by this subsection and measured as provided under "Measurement" shall be paid for at the unit price bid for appropriate type of pipe in the proposal, which price shall be full compensation for excavating, trenching, plugging, placing all materials, backfilling and for all manipulations, labor, tools, equipment and incidentals necessary to complete the work.

LAST PAGE OF THIS SUBSECTION

Subsection 5.05
Storm Sewer Manholes and Inlets

I. Scope: This subsection includes the construction of inlets, junction boxes, and manholes as shown on the plans and itemized in the project plans. The Contractor will furnish any and all materials, including, but not confined to manhole, inlets, junction boxes, manhole rings and lids, and any and all other materials, labor, equipment, and supplies for the completion of this project in accordance with the plans and specifications.

II. Materials

A. General: Concrete placed in the field will conform to Subsection 4.08, "Concrete." Concrete shall be 3000 psi. Precast manholes, inlets, risers, and appurtances are acceptable unless shown on the plans.

B. Water: Water usage shall conform to Subsection 3.04, "Requirements for Water Usage."

C. Manhole Frames, Covers, and Accessories: Manhole rings, cleanout rings and covers, and steps shall be the City of Amarillo standard as shown by details. All ductile iron castings shall be manufactured true to pattern; component parts shall fit together in a satisfactory manner. All ductile iron castings shall conform to AASHTO M 306 and ASTM A536. Storm sewer manhole rings and covers are to be machined or milled flat for no wobble or rattle. They shall be of uniform quality, free from blow holes, porosity, hard spots, shrinkage distortions or other defects. They shall be cleaned by shot blasting and sharp edges shall be ground off. Castings shall be with ±1/16 inch per foot of plan dimensions and within ±5% of plan weight.

1. Any manhole cover found to wobble or rattle after installation shall be immediately removed and replaced with an acceptable ring and cover.

2. If an equivalent accessory is proposed, a catalog cut showing all details and weights, manufacturers name and all pertinent data shall be furnished the Engineer for approval before any order is placed.

D. Fiberglass Manholes

1. General: All fiberglass reinforced polyester manholes shall comply with ASTM D 3753.

2. Marking: Manholes provided under this specification shall be marked with the following information:

a) Manufacturer's name or trademark;

b) Manufacturing serial number;

c) Installation assist marks (vertical lines 90° apart at the base of the manhole);

d) Installation instructions; and

e) Manhole total length.

3. Strength: Manhole cylinders shall have a minimum pipe stiffness of 800 psi when tested in accordance with ASTM Method D 2412. If the cylinder stiffness is obtained by incorporation of a circumferential rib structure in the manhole cylinder, all ribs shall be inside the manhole to provide a smooth exterior surface and minimize dragdown effects. Rib spacing shall not exceed 12 inches center to center to ensure composite action of the ribs and manhole wall.

E. Waterstop in Base: Manhole cylinders shall have a minimum 1 inch wide flange attached to the cylinder a maximum of 2 inches from the end of any cylinder which is to be embedded in a precast or poured-in-place concrete base. The flange may be an integral formed rib or a flange attached with an approved adhesive or bonding agent in order to provide a waterstop around the manhole cylinder.

F. Precast Manholes

1. General: All precast manholes shall comply with ASTM C 478.

2. Marking: Manholes provided under this subsection shall be marked with the following information:

a) Manufacturer's name or trademark;

b) Manufacturing serial number;

c) Installation assist marks (vertical lines 90°apart at the base of the manhole);

d) Installation instructions; and

e) Manhole total length.

G. Precast Concrete Boxes: The precast concrete boxes shall be constructed of concrete to the dimensions shown on the plans. The construction shall be in accordance with ASTM C-857 and ACI 350R.

III. Construction: The Contractor shall design, produce, transport, and place the strength of concrete in accordance with requirements of this subsection. The Contractor will perform quality assurance (QA) testing at the scope and frequency outlined in Table 1. QA testing conducted by the Contractor will be submitted to the ODR for review to determine payment and make acceptance decisions. The Contractor may perform quality control (Q/C) testing. The Contractor is allowed to submit Q/C testing to the ODR. The ODR reserves the right to take additional Q/A tests.

Table 1
Concrete Testing Frequency

Test For	Test Number	Sampling Location	Frequency of Testing	Remarks
Compressive Strength	Tex-418-A	At point of placement	4 cylinders for each 60 CY or fraction thereof for 3000 psi concrete	Sampling shall be in accordance with Tex-407-A. 2 cylinders shall be tested at 7 days and if the average is below the design strength as defined in Table 1 of Subsection 4.08 "Concrete", the remaining 2 cylinders shall be tested at 28 days. If the average value of the 2 cylinders broken at 7 days meets the design strength the 2 remaining cylinders are not required to be tested.
Slump	Tex-415-A	At point of placement	When cylinders are taken.	Maximum slump is 4 inches
Entrained Air	Tex-416-A or Tex-414-A	At point of placement	When cylinders are taken.	A minimum of 3% and a maximum of 7% entrained air is required.
Temperature	Tex-422-A	At point of placement	When cylinders are taken.	A maximum temperature of 90˚F is allowed at placement.

A. Protection of Public or Private Property: The Contractor shall exercise precautions to protect all property. Contractor is responsible for any and all damage to property either private or public, due to his operations.

Should roots or tree branches be removed or damaged, the damage claims resulting from such work shall be settled by the Contractor satisfactorily to the property owner.

The Contractor shall uncover pipes, tees, elbows, and other conduits or utilities which are close to the proposed pipe.

B. Protection of Utilities: The Contractor shall familiarize himself with all utilities locations by consulting with the utility companies, private owners, and by visiting the site. All utility companies should cooperate in locating their properties. The Contractor shall protect utilities and repair all damage he may do at his expense and to the satisfaction of the affected utility company. Where sanitary sewers laterals or services, telephone, traffic or electrical conduits, poles, cables or poles, gas mains or services, water mains, or any other public utilities are encountered, proper protection shall be provided by means of blocks, supports or by some other means acceptable to the affected company or owner so that such property will remain intact and in service. All damage by the Contractor must be repaired in accordance with the affected utility company. Such repair must be done with the least inconvenience to the affected utility company.

C. Excavation: Excavated shall be to lines and grades as shown on the plans. Excavation of structures will conform to Subsection 5.09, "Excavation and Backfill for Structures."

D. Setting and Removing Forms: All forms shall be approved by the Engineer prior to the beginning of pour. Forms which, in the opinion of the Engineer, are defective in any way will not be used, and be removed from the project site.

E. Concrete Placement

Grading, proportioning, moving and placement of the concrete shall produce a homogeneous concrete mixture conforming to this subsection. The concrete shall be transported in such a manner as to insure delivery and placement in the forms without loss or segregation of ingredients and within 1 hour of the time of mixing. Intervals between loads of a continuous pouring shall not exceed 30 minutes or in any case not so great as to allow the concrete already in place to set up or become partially hardened. Continuous mixing shall occur during transit. Concrete shall be consolidated.

F. Temperature: Whenever the air temperature at the project site falls below 40°F. for more than 1/2 day, the concrete shall be maintained above 50°F. for at least 6 days after it is placed. Where artificial heat is employed, special care shall be taken to prevent the concrete from drying. If concrete is placed when the concrete temperature would exceed 90°F. The Contractor shall employ effective means, such as precooling of aggregates and mixing water and placing at night, as necessary to maintain the temperature of the concrete, as it is placed below 90°F.

G. Finish: The surface shall be better than a wood float finish and have no voids on surfaces.

H. Repair: As soon as possible after placement remove forms and repair any, rock pockets, honeycombs, cracks, or indentations. No mortar, concrete, or repair material shall be applied to the surface that has not been moistened and properly cleaned.

I. Curb Inlets: The curb inlets shall be constructed at locations shown on the plans. In new construction, when curb and gutter abuts against an inlet, the two shall be tied together with two 1/2 inch deformed reinforcing bars with minimum lengths of 2 feet. One bar shall be centered in the top 6 inches of the curb and the other shall be centered in the outer 6 inches of the toe.

The backfill shall be in accordance with Subsection 5.09, "Excavation and Backfill for Structures." The Contractor shall exercise extreme care in the backfilling of all inlets. Any inlet that is damaged shall be removed and replaced at the Contractor's expense.

J. Standard Manholes:

1. **Concrete:** Provide in accordance with Subsection 4.08, "Concrete."

2. **Mortar:** Furnish mortar composed of 1 part hydraulic cement and 2 parts clean sand.

3. **Rings:** Concrete rings must come from an approved supplier.

Manholes shall be constructed at the locations of such section and to such depths as are shown on the plans.

In placing of the concrete used in construction of the manholes, the maximum free-fall of the concrete shall be 3 feet.

The inverts through the manholes shall be well formed of concrete and shall be steel toweled.

K. Precast Manholes: Precast manholes shall be set straight and true with all joints mortared. The manhole ring and cover shall be set to finish grade and securely anchored to the manhole.

L. Poured in Place Manholes: Poured in place manholes shall be set straight and true with smooth forms. The wall thickness shall be 8 inches, it shall have #4 bars at 9 inches on center vertically, and #4 bars at 12 inches on center horizontal. The manhole ring and cover shall be set to finish grade and securely anchored to the manhole.

M. Backfilling and Restoration of Surface:

a) Backfill Backfilling shall be in accordance with Subsection 5.09, "Excavation and Backfill for Structures."

b) Pavement Cuts: Pavement cuts shall be made in accordance with Subsection 4.01, "Utility Construction in City of Amarillo Right of Way and Easements."

1. **Protection of Public:** The Contractor shall furnish, place, erect, and maintain adequate barricades, construction signs, guards, and warning devices necessary for the protection of the public and private property. Whenever required, watchmen shall be provided at the Contractor's expense for this protection. When any thoroughfare will be closed to traffic, the Contractor shall notify all ambulance services, the Central Fire Station, and the Traffic Engineering Department of the City of Amarillo at least 24 hours prior to such closing as follows:

A traffic plan shall be submitted to the Traffic Engineer for his approval a minimum of 24 hours prior to the actual closing of the street. This plan shall include the proposed time and date of closure and the estimated time limits the street will be closed during the project. Work should be scheduled, if possible, so that peak-hour traffic, 7 a.m. to 8 a.m. and 5 p.m. to 6 p.m., can utilize the street or area under construction. The Contractor shall include on his plan and provide all necessary barricades, signs, flagmen, and other warning devices to accommodate traffic movements and detours.

Should it be necessary to detour traffic at any point, the Contractor shall erect proper barricades and post definite detour directions at all points to be travelled by those who must detour. If the Contractor uses a dirt street for a detour, he shall keep the dust settled on the detour so that it will not be obnoxious to those living adjacent to or near the detour. No extra remuneration will be paid for dust abatement.

Prior consideration must be given so that no storm drain, storm sewer, inlet, ditch, gutter, or any other storm water carrier will be stopped or partially stopped so as to hinder the natural flow of water being carried to or by one or more of these structures.

2. **Protection of Work:** It is the responsibility of the Contractor to protect his work against weather, vandals, and any and all things that may mar the finish, surface, or the appearance of the product.

   The Contractor shall maintain proper crossings, to protect and to repair damaged property, to keep the backfill completed to acceptable limits, and to clean up waste materials and surplus excavation. Failure to do any or all of these things shall be just claim for the City of Amarillo to withhold estimates until such faults shall have been corrected.

   Should the Contractor remove or damage any curbs, sidewalks, driveways, shrubbery, plants, trees, fences, sod, or any other private or public property outside of the normal trench width, he shall replace same to condition equal to or better than that before the work began at his own expense, furnishing all labor, materials, supplies, equipment, and any and all things necessary. Replacements within the normal trench width will be paid at the unit prices bid. Repairs and replacement are to be made as soon as practicable, in the opinion of the Engineer.

3. **Clean Up:** The Contractor shall remove all surplus construction materials, equipment, scraps, broken pipe, debris, and rubbish from the site and leave the site in a first-class workmanlike manner. At no time shall complete clean- up be more than 1000 feet behind the laying of the pipe. Dust is to be kept at an absolute minimum by sweeping and/or wetting of fill in the ditch.

IV. Measurement: All measurements of all manholes and inlets completed satisfactorily will be by the each.

V. Payment: The fittings, manholes, inlets shall be paid for at the unit prices as set forth in the proposal. The furnishing and installation of manhole rings, lids, foundation and floor, testing, backfill, excavation, labor, and any and all things necessary for a complete installation will be included in the bid price of manholes, inlets, junction boxes, and other appurtenances. The depth for cuts shall be figured from the pipe invert to the top of the natural ground.

.

LAST PAGE OF THIS SUBSECTION

Subsection 5.06
Headwalls, Wingwalls and Safety End Treatments

I. Scope: Furnish, construct and install, concrete headwalls, wingwalls, and safety end treatments for drainage structures.

II. Material

A. Furnishing materials in accordance with:

1. Subsection 4.08, "Concrete;"

2. Subsection 4.13, "Reinforcing Steel;"

3. Subsection 4.33, "Metal Beam Guard Fence;

4. Subsection 5.01, "Reinforced Concrete Storm Sewer Pipe;"

5. Subsection 5.02, "High-Density Polypropylene Storm Sewer Pipe;"

6. Subsection 5.03, "Corrugated Metal Storm Sewer Pipe;"and

7. Supply cast in place or pre-cast units as shown in the plans.

Provide galvanized steel for prefabricated metal end sections that meet the requirements of galvanized pipe detailed in Subsection 5.03, "Corrugated Metal Storm Sewer Pipe."

B. When required furnish pipe runners for safety end treatments in accordance with the following:

1. ASTM A 1085;

2. ASTM A 53, Type E or S, Grade B;

3. ASTM A500, Grade B; or

4. API 5L, Grade X42.

Furnish plates and angles in accordance with ASTM A36. Furnish nuts and bolts in accordance with ASTM A307. Galvanize pipes, plates, angles, nuts, and bolts in accordance with Subsection 4.33, "Metal Beam Guard Fence."

C. Fabrication

1. Headwalls and Wingwalls

a) General: Fabricate cast in place concrete in accordance with Subsection 4.08, "Concrete"; Use the following definitions for headwalls and wingwalls:

(1) "Headwalls" refers to all walls, including wings, at the ends of single-barrel and multi-barrel pipe culvert structures.

(2) "Wingwalls" refers to all walls at the ends of single-barrel or multi-barrel box culvert structures.

b) Marking: Clearly mark each precast unit before shipment from the casting yard with the following:

(1) Date of manufacture;

(2) Name or Trademark of manufacturer; and

(3) Type and size of unit.

c) Causes for Rejection: Precast units may be rejected for fractures or cracks passing through the wall. Surface defects of honeycombed or open areas. Remove and replace rejected units. Imperfections may be repaired if approved by the ODR or the Engineer.

2. Safety End Treatments: Fabricate cast in place concrete units in accordance with Subsection 4.08, "Concrete."

For reinforced concrete pipe provide either mitered ends or precast safety end treatments (SET).

a) SET Types

(1) Type I. SET consisting of concrete headwalls or wingwalls and pipe runners in accordance with the plans.

(2) Type II. SET consisting of mitered ends for pipes in the proper slope shown in the plans and pipe runners when required.

b) Causes for rejection: Precast units may be rejected for fractures or cracks passing through the wall. Surface defects of honeycombed or open areas. Remove and replace rejected units. Imperfections may be repaired if approved by the ODR or the Engineer.

III. Construction: The Contractor shall design, produce, transport, and place the strength

of concrete in accordance with requirements of this subsection. The Contractor will perform quality assurance (QA) testing at the scope and frequency outlined in Table 1. QA testing conducted by the Contractor will be submitted to the ODR for review to determine payment and make acceptance decisions. The Contractor may perform quality control (Q/C) testing. The Contractor is allowed to submit Q/C testing to the ODR. The ODR reserves the right to take additional Q/A tests.

Table 1
Concrete Testing Frequency

Test For	Test Number	Sampling Location	Frequency of Testing	Remarks
Compressive Strength	Tex-418-A	At point of placement	4 cylinders for each 100 CY or fraction thereof for 3000 psi concrete.	Sampling shall be in accordance with Tex-407-A. 2 cylinders shall be tested at 7 days and if the average is below the design strength as defined in Table 1 of Subsection 4.08 "Concrete", the remaining 2 cylinders shall be tested at 28 days. If the average value of the 2 cylinders broken at 7 days meets the design strength the 2 remaining cylinders are not required to be tested.
Slump	Tex-415-A	At point of placement	When cylinders are taken.	Slump shall not exceed 4 inches
Entrained Air	Tex-416-A or Tex-414-A	At point of placement	When cylinders are taken.	A minimum of 3% and a maximum of 7% entrained air is required
Temperature	Tex-422-A	At point of placement	When cylinders are taken.	A maximum of 90˚F is allowed at placement.

A. General: Remove portions of existing culvert or pipes if necessary for application of SET. The SET will match the type of pipe that the SET is connected.

B. Excavation, Shaping, Bedding, and Backfill: Excavate, shape, bed and backfill in accordance with Subsection 5.09, "Excavation and Backfill for Structures." SET must be placed on a firm foundation. Take precautions to keep from disturbing the SET while backfilling.

C. Connections: Make connections to new or existing structures using joint material shown in Subsection 5.01, "Reinforced Concrete Storm Sewer Pipe", Subsection 5.02, "High Performance Polypropylene Storm Sewer Pipe" and Subsection 5.03, "Corrugated Metal Storm Sewer Pipe."

D. Pipe Runners: Install pipe runners as shown on the plans.

IV. Measurement

A. Headwalls will be measured by each end of structure

B. Wingwalls will be measured by each end of structure.

C. Safety End Treatments will be measured by each end of structure.

V. Payment: The work performed and materials furnished as prescribed by this subsection and measured as provided under "Measurement" shall be paid for at the unit price bid for " Headwalls, Wingwalls, and Safety End Treatments", which price shall be full compensation for supplying, hauling, testing, installing of end treatments; excavating, and backfilling, and all incidentals necessary to complete the work. Riprap aprons around precast SET's are subsidiary to the end treatment.

LAST PAGE OF THIS SUBSECTION

Subsection 5.07
Box Culverts

I. Scope: Furnish, construct and install, concrete box culverts for drainage structures.

II. Material

A. Furnishing materials in accordance with:

1. Subsection 4.08, "Concrete;"

2. Subsection 4.13, "Reinforcing Steel;"

3. Subsection 5.01, "Reinforced Concrete Storm Sewer Pipe," and

Provide material for machine-made precast boxes in accordance with DMS-7310, "Reinforced Concrete Pipe and Machine Made Precast Concrete Box Culvert Fabrication and Plant Qualification.

B. Fabrication

1. Cast in Place: Fabricate cast in place concrete in accordance with Subsection 4.08, "Concrete."

2. Precast: Supplier of box culverts must be on TxDOT's MPL.

a) Marking: Clearly mark each precast unit before shipment from the casting yard with the following:

(1) Date of manufacture;

(2) Name or Trademark of manufacturer;

(3) Size of box;

(4) Minimum and maximum fill heights; and

(5) Approval stamp.

b) Defects and Repair: Repair cracks that extend to the reinforcing steel. Honeycomb areas or excessive damage will be subject to a structural review. This review will be provided by the contractor. Without a structural review being completed, the boxes will be rejected.

III. Construction: The Contractor shall design, produce, transport, and place the stregth of

concrete in accordance with requirements of this subsection. The Contractor will perform quality assurance (QA) testing at the scope and frequency outlined in Table 1. QA testing conducted by the Contractor will be submitted to the ODR for review to determine payment and make acceptance decisions. The Contractor may perform quality control (Q/C) testing. The Contractor is allowed to submit Q/C testing to the ODR. The ODR reserves the right to take additional Q/A tests.

Table 1
Concrete Testing Frequency

Test For	Test Number	Sampling Location	Frequency of Testing	Remarks
Compressive Strength	Tex-418-A	At point of placement	4 cylinders for each 60 CY or fraction thereof for 4000 psi concrete for direct traffic culvert decks. 4 cylinders for each 100 CY or fraction thereof for 3000 psi concrete for rest of box culvert.	Sampling shall be in accordance with Tex-407-A. 2 cylinders shall be tested at 7 days and if the average is below the design strength as defined in Table 1 of Subsection 4.08 "Concrete", the remaining 2 cylinders shall be tested at 28 days. If the average value of the 2 cylinders broken at 7 days meets design strength the 2 remaining cylinders are not required to be tested.
Slump	Tex-415-A	At point of placement	When cylinders are taken.	Slump will not exceed 4 inches
Entrained Air	Tex-416A or Tex-414A	At point of placement	When cylinders are taken.	A minimum of 3% and a maximum of 7% entrained air is required.
Temperature	Tex-422-A	At point of placement	When cylinders are taken.	A maximum of 90˚F is allowed at time of placement.

A. Excavation, Shaping, Bedding, and Backfill: Excavate, shape, bed and backfill in accordance with Subsection 5.09," Excavation and Backfill for Structures." Boxes must be placed on a firm foundation. Take precaution to keep from disturbing the boxes while backfilling. Any boxes damaged during placement and backfilling will be replaced at no additional cost to the City. Pavement cuts shall be made in accordance with Subsection 4.01, "Utility Construction in City of Amarillo Right of Way and Easements."

B. Placement of Boxes: Place the box sections in conformance with the plans or as directed. Start laying boxes on the bedding at the outlet end and proceed toward the inlet end. Lay boxes to form a smooth and uniform conduit that is true to the lines and grades shown in the plans. Boxes shall be laid so they are not damaged and the bedding and walls are not disturbed. Boxes out of alignment will be removed and relayed at the Contractor's expense.

C. Jointing: Use any of the jointing materials in accordance with 5.01, " Reinforced Concrete Storm Sewer Pipe." Maximum joint allowed is 1/2" inch.

D. Connections and Stub Ends: Make connections to existing boxes, pipes, or inlets. Mortar or concrete the bottom of existing structure to eliminate any drainage pockets. Connect boxes to ant required headwalls, wingwalls or safety end treatments. Plugging structures will be considered subsidiary to this item.

IV. Measurement: This Subsection will be paid for by the linear foot of each barrel. Measurement of each line will be measured along the flow line to the surface into which it connects. All work to tie boxes into existing appurtances will be included in the measurement.

V. Payment: The work performed and materials furnished as prescribed by this subsection and measured as provided under "Measurement" shall be paid for at the unit price bid for " Box Culvert," which price shall be full compensation for supplying, hauling, testing, installing of end treatments; excavating, and backfilling, and all incidentals necessary to complete the work. Excavation, shaping, bedding, and backfill in accordance with Subsection 5.09, "Excavation and Backfill for Structures," will be subsidiary to this section.

LAST PAGE OF THIS SUBSECTION

Subsection 5.08
Trench Protection

I. Scope: Supply and place excavation protection for trenches deeper than 5 feet.

II. Construction Methods: Provide vertical or sloped cuts, benches, shields, support systems, or other systems providing the necessary protection in accordance with OSHA Standards and Interpretations, 29 CFR 1926, Subpart P, “Excavations.”

III. Measurement: Trench protection will be measured by the foot along the long axis of the trench where the depth of the trench exceeds 5 feet. This measurement includes all required trench protection.

IV. Payment: The work performed and materials furnished as prescribed by this item and measured as provided under "Measurement" shall be paid for at the unit price bid for " Trench Protection", which price shall be full compensation for excavation and backfill required for the excavation protection, furnishing, placing, and removing shoring, sheeting, or bracing; dewatering or diversion of water; jacking or jack removal; and equipment, labor, materials, tools and all incidentals necessary to complete the work.

LAST PAGE OF THIS SUBSECTION

Subsection 5.09
Excavation and Backfill for Structures

I. Scope: Excavate for placement and construction of structures and backfill structures. Cut and restore pavement.

II. Materials: Use materials that meet the following requirements:

A. Aggregate for backfill will be in accordance with Subsection, 5.01, Reinforced Concrete Pipe."

B. Flowable backfill will be in accordance with Subsection 4.01, "Utility Construction in City of Amarillo Right of Way and Easements."

C. Subsection 5.08, "Trench Protection."

D. Water usage shall conform to Subsection 3.04, "Requirements for Water Usage."

III. Construction

A. Excavation: Excavate to lines and grades shown on the plans. Follow the requirements listed in Subsection 5.08, "Trench Protection," for excavations for 5 foot in depth. Dispose of material not incorporated into the final project off the project in accordance with federal, state, and local regulations. Do not place material in areas designated as flood zones.

1. Obstructions: Remove obstructions in the proposed construction, including trees and other vegetation, debris, and structures, over the width of the excavation to a depth of 1 foot below the bottom of excavation. Restore the bottom of the excavation to grade by backfilling after removing obstructions in accordance with the Subsection. Dispose of obstruction off the project in accordance with federal, state, and local regulations.

2. Excavation in Streets: Cut and restore pavement in accordance with Subsection 4.01, "Utility Construction in City of Amarillo Right of Way and Easements;" Maintain and control traffic in accordance with the approved traffic control plan and the TMUTCD.

3. Utilities: The Contractor is responsible locating and coordinating work around existing utilities. The contractor is responsible for contacting 811 for private utilities or the City for damage to City owned existing utilities.

4. De-Watering: The Contractor shall remove water by bailing, pumping,

or other approved methods. After pumping area it is required to dry for 36 hours for material to seal off. If dewatering is not successful place bedding of flex base, cement stabilized base of lean concrete having a minimum strength of 275 pounds of cement per cubic yard. Bedding must be at least 3 inches thick.

5. Unstable Material: Remove unstable material to a depth of not more than 2 feet. Replace excavated material with stabile material in layers not greater than 8 inches. Compact to provide a stable foundation for structure.

6. Incompressible Material: Remove rock and other incompressible material to 6 inches below grade and replace with compressible material.

B. Shaping and Bedding: For box culverts place 2 inches of fine granular material as bedding. For pipe either excavate to shape of pipe or place sand in accordance with Subsection 5.01, "Reinforced Concrete Storm Sewer Pipe."

C. Backfill:

1. Backfill for Pipes: Backfill the excavation as soon as practical. Backfill in accordance with Subsection 5.01, "Reinforced Concrete Storm Sewer Pipe."

2. Backfill for Retaining walls, Headwalls, Inlets and Box Culverts: Place backfill against the structure only after the concrete has reached 3000 psi. Backfill using material in accordance with Subsection 5.01, "Reinforced Concrete Storm Sewer Pipe." Use mechanical tamps to avoid damage to the structure where backfill in placed in area that are not accessible by blades and rollers. Place backfill in uniform lifts completely around structure.

IV. Measurement: This subsection is subsidiary to other pay items.

V. Payment: There is no pay item for this subsection.

LAST PAGE OF THIS SUBSECTION

Subsection 5.10
Gabions and Gabion Mattresses

I. Scope: Furnish and install gabions and Gabion Mattresses. A gabion is a wire container, filled with stone and has a height of 1 foot or greater. A gabion mattress is a wire container, filled with stone and has a height of 6, 9, or 12 inches.

II. Materials

A. Furnish welded wire gabions and gabion mattresses in accordance with ASTM A974 and ASTM A975. Gabions and mattresses come in 5 styles and the style will be shown on the plans.

1. Style 1: Consists of welded wire fabric made from wire which is zinc coated before being welded into fabric. Spiral binders, lacing wire, and stiffeners are produced from zinc-coated wire.

2. Style 2: Consists of welded wire fabric which is made from uncoated wire and the fabric is subsequently zinc coated after fabrication. Spiral binders, lacing wire, and stiffeners are produced from zinc-coated wire.

3. Style 3: Consists of welded of wire fabric made from wire which is coated with zinc-5% aluminum-mischmetal alloy before welded into fabric. Spiral binders, lacing wire, and stiffeners are also produced from zinc-5% aluminum-mischmetal alloy.

4. Style 4: Consists of welded wire fabric made from wire which is aluminum coated before being welded into fabric. Spiral binders, lacing wire, and stiffeners are also produced from aluminum coated wire.

5. Style 5: Consists of welded wire fabric, spiral binders, lacing wire, and stiffeners as Styles 1, 2, 3, or 4 and overcoated with PVC**.**

Lacing wire is used to assemble and interconnect empty gabion units. Spiral binder is an alternative to lacing wire. Stiffeners are diagonal wires running from corner to corner of gabion units.

B. Stone: Provide filler stone consisting of clean, hard, durable stone that does not contain shale, caliche, or other soft particles. Stone must have a 5-cycle magnesium sulfate soundness of mess than 18% when tested in accordance with ASTM C 88. Stone must have a minimum specific gravity of 2.50 as determined by ASTM C 127 and C 128. Use stones that are between 4 and 8 inches in their least dimension for gabions and between 3 and 6 inches for gabion mattresses. Prevent

contamination during storage and handling.

C. Filter Fabric: Provide Type 2 filter fabric in accordance with DMS-6200, "Filter Fabric", when shown on the plans.

III. Construction

During construction of the gabions and gabion mattresses, the manufacturer must have a qualified representative available for consultation as needed throughout the gabion and gabion mattress construction.

A. Foundation Preparation: Excavate the foundation to the extent shown in the plans or as directed. Remove all loose or otherwise unsuitable materials. Carefully backfill all depressions to grade with suitable materials from adjacent required excavation, and compact the backfill to a density at least equal to the adjacent foundation. Remove all debris protruding from the foundation that will impede the proper installation and final appearance of the gabion or gabion mattress. Carefully backfill and compact voids as specified above. Inspection by the ODR or his representative is required before placement of the gabion unit.

B. Filter Placement: Store filter fabric out of direct sunlight. Spread filter material, when required, uniformly on the prepared foundation surface to the slopes, lines, and grades indicated on the plans. Repair all damage to the foundation surface that occurs during filter placement before proceeding with the work. Filter material should present a reasonably even surface without mounds or windrows. Any defects, rips, holes, flaws, or damage to the material may be cause for rejection. Torn or punctured fabric may be repaired if allowed by the ODR. Repair the tear or puncture by placing a layer of fabric over the damaged area, overlapping at least 3 foot beyond the damaged area in all directions. Place the material with the long axis parallel to the centerline of the structure. Place securing pins in the lapped longitudinal joints, spaced approximately 10 feet apart. Lap the material at least 3 foot along the longitudinal joint. If sewing joint, lap 1 foot. Lap the ends of rolls at joints by at least 3 foot. Keep fabric material from of tension, stress, folds, wrinkles, or creases. Cover filter fabric as soon as possible after placing, but within 3 days.

C. Assembly and Installation: Place PVC-coated materials, when the ambient temperature and the temperature of the coated wire are more than 15°F above the brittleness temperature of the PVC.

Assemble empty gabion or gabion mattress units individually, and place them on the approved surface to the lines and grades shown on the plans with the sides, ends, and diaphragms erected to ensure all creases are in the correct position, the tops of all sides are level, and all sides that are to remain exposed are straight and plumb. Fill the baskets units after transporting them to their final position.

Place the front row of gabion or gabion mattress unit first and successfully construct units towards the top of the slope or the back of the structure. Place the initial line of

basket units on the prepared surface, and partially fill them to provide anchorage against deformation and displacement during subsequent filling operations. Stretch and hold empty basket units as necessary to remove kinks and provide a uniform alignment. Connect all adjoin empty gabion or gabion mattress units with lacing, wire spiral binders, or approved fasteners along the perimeter of their contact surface to obtain a monolithic structure before filling. Provide continuous stitching with alternating single and double loops at intervals of no more than 5 inches if lacing wire is used. Securely fasten all lacing wire terminals.

Carefully fill the basket units with stone, using hand placement to avoid damaging wire coating, to ensure as few voids as possible between the stones and to maintain alignment. Correct excessive deformation and bulging of the mesh before filling. Fill the basket units in a row in stages consisting of maximum 12 inch courses to avoid localized deformation. Do not exceed 1 foot fill more than the adjoining cell. Do not drop stones into basket units from a height greater than 36 inches.

Place 2 uniformly spaced internal connecting wires between each stone layer in all front and side gabion units, connecting the back and the front faces of the compartments for gabion units more than 2 foot high and secure the ends to prevent loosening.

Place the outer layer of stone carefully along all exposed faces and arrange it by hand to ensure a neat and compact appearance. Overfill the last layer of stone uniformly by 1 or 2 inches for gabions and 1 inch for gabion mattresses to compensate for future settlement in rock while still allowing for the proper closing of the lid and providing an even surface with a uniform appearance. Stretch lids tight over the stone fill, using an approved lid-closing tool, until the lid meets the perimeter edges of the front and end panels. Do not use crowbars or other single-point leverage bars for lid closing. Use spiral binders or lacing wire along all edges to close lid tightly. Cut, fold and wire units together where a complete gabion or gabion mattresses units cannot be installed because of space limitations.

IV. Measurement: Gabions will be measured in place by the cubic yard of stone filled gabions. Gabion Mattresses will be measured in place by the square yard or by the cubic yard.

V. Payment: The work performed and materials furnished as prescribed by this subsection and measured as provided under "Measurement" shall be paid for at the unit price bid for " Gabions", which price shall be full compensation for excavation, grading, backfill, placing wire baskets, fill stone, lacing, fasteners, filter fabric, and equipment, labor, materials, tools and all incidentals necessary to complete the work.

LAST PAGE OF THIS SUBSECTION